野火鲁班猫SD3403(LubanCat-SD3403)

Page 1	目录
Page 2	历史版本
Page 3	电源
Page 4	*SD3403 POWER*
Page 5	*SD3403 GND*
Page 6	*SD3403 SYS*
Page 7	*SD3403 VI*
Page 8	*SD3403 VO*
Page 9	*SD3403 PERIPHERAL1*
Page 10	*SD3403 PERIPHERAL2*
Page 11	*SD3403 DDRC*
Page 12	*LDDDR4/4x_1*
Page 13	*LDDDR4/4x_1*
Page 14	*EMMC/SPI Flash*
Page 15	*以太网*
Page 16	*USB/耳机接口*
Page 17	*SD Card/Debug/RTC*
Page 18	FAN/按键/硬件配置/IO引出
Page 19	MINI PCIE接口
Page 20	*HDMI接口*
Page 21	MIPI DSI/CSI接口
Page 22	USB WIFI模块

东莞野火电子技术有限公司
https://yehuosm.tmall.com

Title: 野火鲁班猫SD3403(LubanCat-SD3403)

Size: A4 | Document Number: 目录 | Rev: V1.0

Date: Saturday, October 18, 2025 | Sheet 1 of 22

历史版本

版本号	日期	设计	描述
V0.1	20250616	llm	初始版本,开发阶段
V0.2	20251018	llm	1.以太网PHY芯片供电添加10uF的滤波电容 2.修正USB和PCIE的分配策略，USB下载接口改为USB3.0 TYPEA接口 3.3PIN Debug接口改为板载CH340，改为typec接口 4.耳机接口电源改为3.3V 5.根据海思硬件设计规范调整了40PIN排针接口33、35、12、32引脚信号 注：以上修改为开发阶段的修改

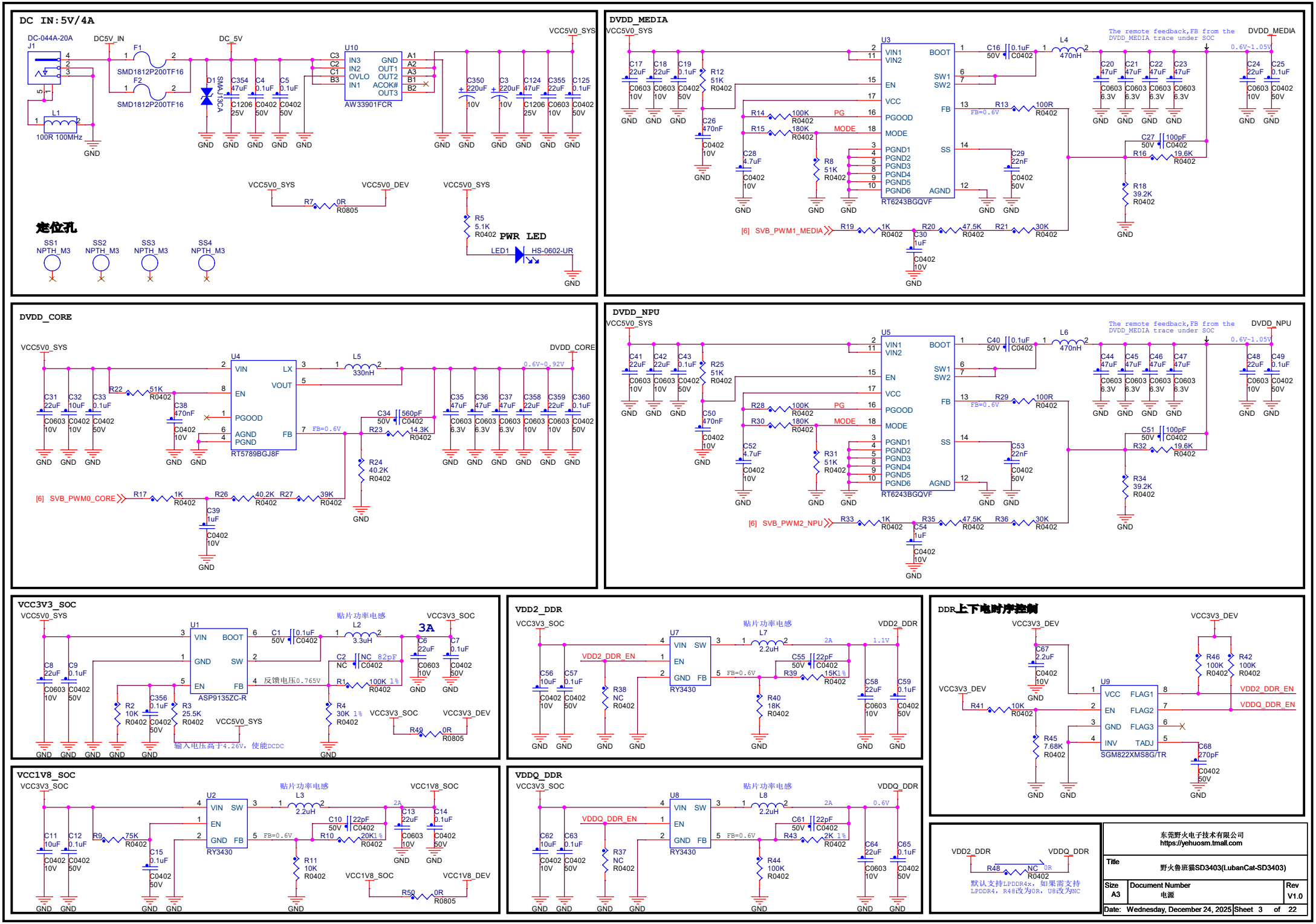
DC IN:5V/4A
DC-044A-20A
J1
DC5V_IN
F1
SMD1812P200TF16
F2
SMD1812P200TF16
L1
100R 100MHz
D1
SMAJ13CA
DC_5V
C354 47uF C1206 25V
C4 0.1uF C0402 50V
C5 0.1uF C0402 50V
U10
IN3 IN2 OVLO IN1
GND OUT1 OUT2 ACOK# OUT3
A1 A2 A3 B1 B2
AW33901FCR
VCC5V0_SYS
C350 220uF 10V
C3 220uF 10V
C124 47uF C1206 25V
C355 22uF C0603 10V
C125 0.1uF C0402 50V
VCC5V0_SYS
R7 0R R0805
VCC5V0_DEV
VCC5V0_SYS
R5 5.1K R0402
PWR LED
LED1 HS-0602-UR
定位孔
SS1 NPTH_M3
SS2 NPTH_M3
SS3 NPTH_M3
SS4 NPTH_M3
DVDD_MEDIA
VCC5V0_SYS
U3
VIN1 VIN2 EN VCC PGOOD MODE PGND1 PGND2 PGND3 PGND4 PGND5 PGND6
BOOT SW1 SW2 FB SS AGND
RT6243BGQVF
C16 0.1uF C0402 50V
L4 470nH
The remote feedback,FB from the DVDD_MEDIA trace under SOC
DVDD_MEDIA
0.6V~1.05V
C20 47uF C0603 6.3V
C21 47uF C0603 6.3V
C22 47uF C0603 6.3V
C23 47uF C0603 6.3V
C24 22uF C0603 10V
C25 0.1uF C0402 50V
C17 22uF C0603 10V
C18 22uF C0603 10V
C19 0.1uF C0402 50V
R12 51K R0402
C26 470nF C0402 10V
R14 100K R0402
R15 180K R0402
PG
MODE
C28 4.7uF C0402 10V
R8 51K R0402
R13 100R R0402
FB=0.6V
C29 22nF C0402 50V
C27 100pF C0402 50V
R16 19.6K R0402
R18 39.2K R0402
[6] SVB_PWM1_MEDIA
R19 1K R0402
C30 1uF C0402 10V
R20 47.5K R0402
R21 30K R0402
DVDD_CORE
VCC5V0_SYS
U4
VIN EN PGOOD AGND PGND
LX VOUT FB
RT5789BGJ8F
L5 330nH
DVDD_CORE
0.6V~0.92V
C31 22uF C0603 10V
C32 10uF C0402 10V
C33 0.1uF C0402 50V
R22 51K R0402
C38 470nF C0402 10V
C34 560pF C0402 50V
R23 14.3K R0402
FB=0.6V
R24 40.2K R0402
C35 47uF C0603 6.3V
C36 47uF C0603 6.3V
C37 47uF C0603 6.3V
C358 22uF C0603 10V
C359 22uF C0603 10V
C360 0.1uF C0402 50V
[6] SVB_PWM0_CORE
R17 1K R0402
R26 40.2K R0402
R27 39K R0402
C39 1uF C0402 10V
DVDD_NPU
VCC5V0_SYS
U5
VIN1 VIN2 EN VCC PGOOD MODE PGND1 PGND2 PGND3 PGND4 PGND5 PGND6
BOOT SW1 SW2 FB SS AGND
RT6243BGQVF
C40 0.1uF C0402 50V
L6 470nH
The remote feedback,FB from the DVDD_MEDIA trace under SOC
DVDD_NPU
0.6V~1.05V
C44 47uF C0603 6.3V
C45 47uF C0603 6.3V
C46 47uF C0603 6.3V
C47 47uF C0603 6.3V
C48 22uF C0603 10V
C49 0.1uF C0402 50V
C41 22uF C0603 10V
C42 22uF C0603 10V
C43 0.1uF C0402 50V
R25 51K R0402
C50 470nF C0402 10V
R28 100K R0402
R30 180K R0402
PG
MODE
C52 4.7uF C0402 10V
R31 51K R0402
R29 100R R0402
FB=0.6V
C53 22nF C0402 50V
C51 100pF C0402 50V
R32 19.6K R0402
R34 39.2K R0402
[6] SVB_PWM2_NPU
R33 1K R0402
C54 1uF C0402 10V
R35 47.5K R0402
R36 30K R0402
VCC3V3_SOC
VCC5V0_SYS
U1
VIN GND EN
BOOT SW FB
ASP9135ZC-R
C1 0.1uF C0402 50V
贴片功率电感
L2 3.3uH
VCC3V3_SOC
3A
C6 22uF C0603 10V
C7 0.1uF C0402 50V
C2 NC 82pF C0402
R1 100K 1% R0402
反馈电压0.765V
C8 22uF C0603 10V
C9 0.1uF C0402 50V
R2 10K R0402
C356 0.1uF C0402 50V
R3 25.5K R0402
VCC5V0_SYS
R4 30K 1% R0402
VCC3V3_SOC
VCC3V3_DEV
R49 0R R0805
输入电压高于4.26V，使能DCDC
VDD2_DDR
VCC3V3_SOC
U7
VIN EN GND
SW GND FB
RY3430
贴片功率电感
L7 2.2uH
VDD2_DDR
1.1V
VDD2_DDR_EN
C56 10uF C0402 10V
C57 0.1uF C0402 50V
R38 NC R0402
FB=0.6V
C55 22pF C0402 50V
R39 15K1% R0402
R40 18K R0402
C58 22uF C0603 10V
C59 0.1uF C0402 50V
DDR上下电时序控制
VCC3V3_DEV
C67 2.2uF C0402 10V
VCC3V3_DEV
R41 10K R0402
U9
VCC EN GND INV
FLAG1 FLAG2 FLAG3 TADJ
SGM822XMS8G/TR
R46 100K R0402
R42 100K R0402
VDD2_DDR_EN
VDDQ_DDR_EN
R45 7.68K R0402
C68 270pF C0402 50V
VCC1V8_SOC
VCC3V3_SOC
U2
VIN EN GND
SW FB
RY3430
贴片功率电感
L3 2.2uH
VCC1V8_SOC
2A
C11 10uF C0402 10V
C12 0.1uF C0402 50V
R9 75K R0402
C15 0.1uF C0402 50V
FB=0.6V
C10 22pF C0402 50V
R10 20K1% R0402
C13 22uF C0603 10V
C14 0.1uF C0402 50V
R11 10K R0402
VCC1V8_SOC
VCC1V8_DEV
R50 0R R0805
VDDQ_DDR
VCC3V3_SOC
U8
VIN EN GND
SW FB
RY3430
贴片功率电感
L8 2.2uH
VDDQ_DDR
0.6V
VDDQ_DDR_EN
C62 10uF C0402 10V
C63 0.1uF C0402 50V
R37 NC R0402
FB=0.6V
C61 22pF C0402 50V
R43 2K 1% R0402
R44 100K R0402
C64 22uF C0603 10V
C65 0.1uF C0402 50V
VDD2_DDR
VDDQ_DDR
R48 NC 0R R0402
默认支持LPDDR4x，如果需支持LPDDR4，R48改为0R，U8改为NC
东莞野火电子技术有限公司
https://yehuosm.tmall.com
Title
野火鲁班猫SD3403(LubanCat-SD3403)
Size A3
Document Number 电源
Rev V1.0
Date: Wednesday, December 24, 2025
Sheet 3 of 22

SD3403 PWOER

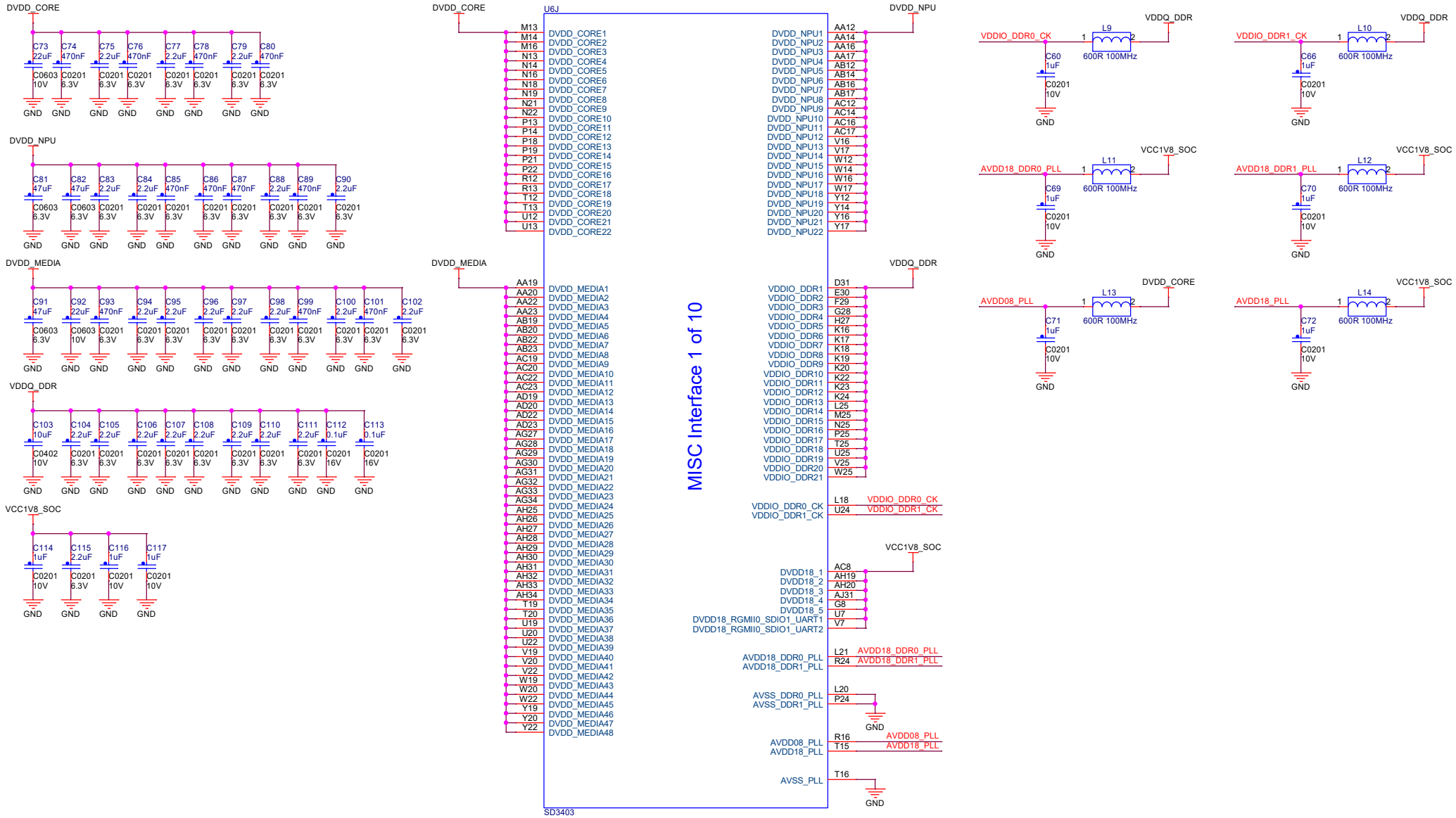

东莞野火电子技术有限公司 https://yehuosm.tmall.com		
Title	野火鲁班猫SD3403(LubanCat-SD3403)	
Size A3	Document Number SD3403 POWER	Rev V1.0
Date: Saturday, October 18, 2025	Sheet 4 of 22	

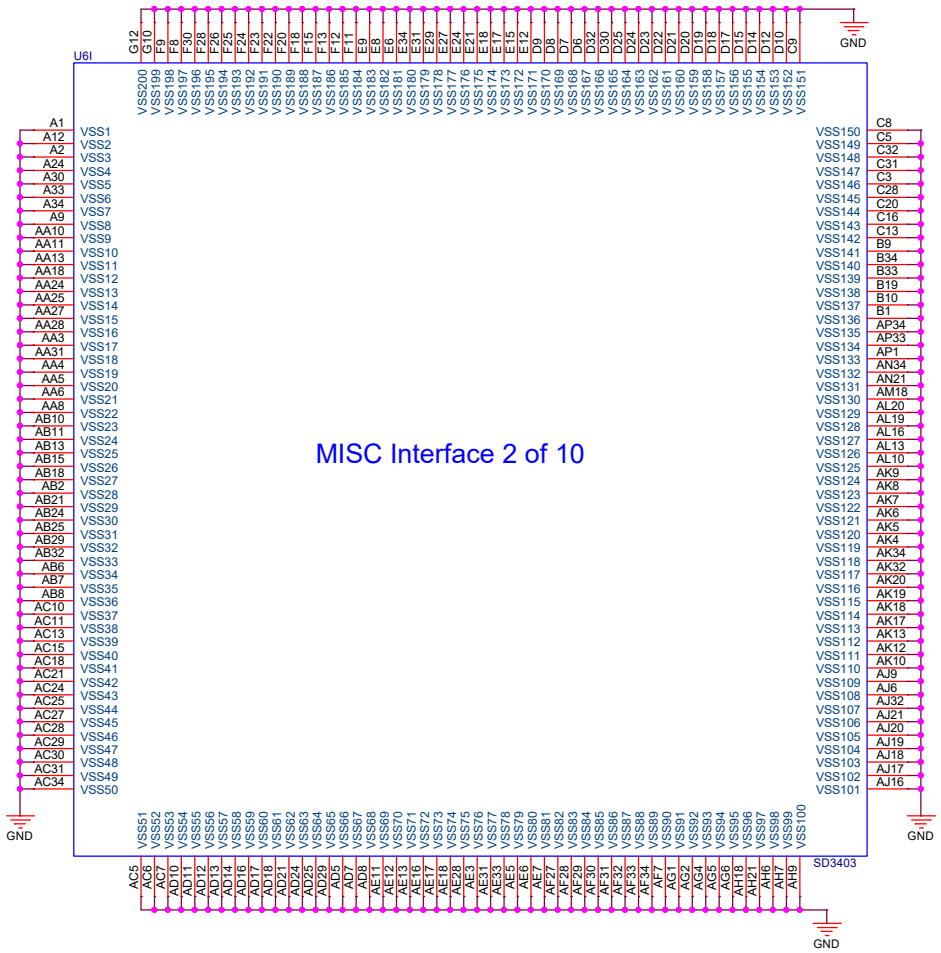

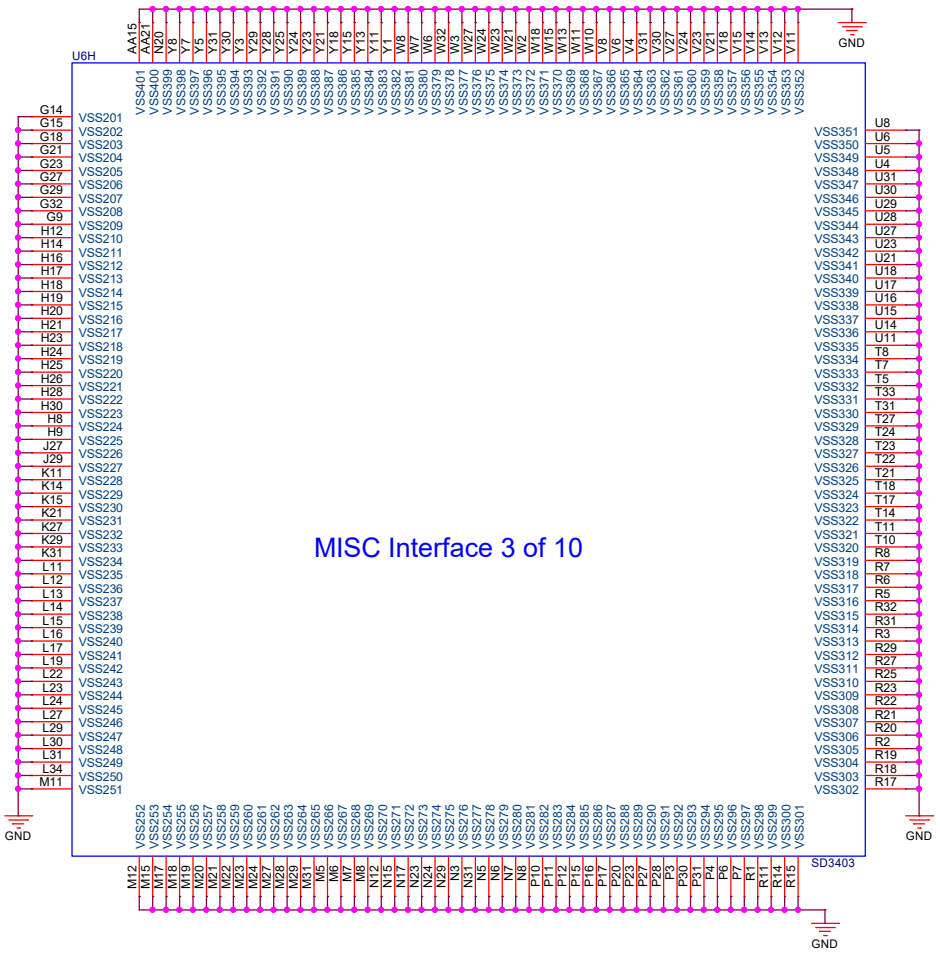

东莞野火电子技术有限公司 https://yehuosm.tmall.com		
Title	野火鲁班猫SD3403(LubanCat-SD3403)	
Size A3	Document Number SD3403 GND	Rev V1.0
Date: Saturday, October 18, 2025	Sheet 5 of 22	

SD3403 SYS

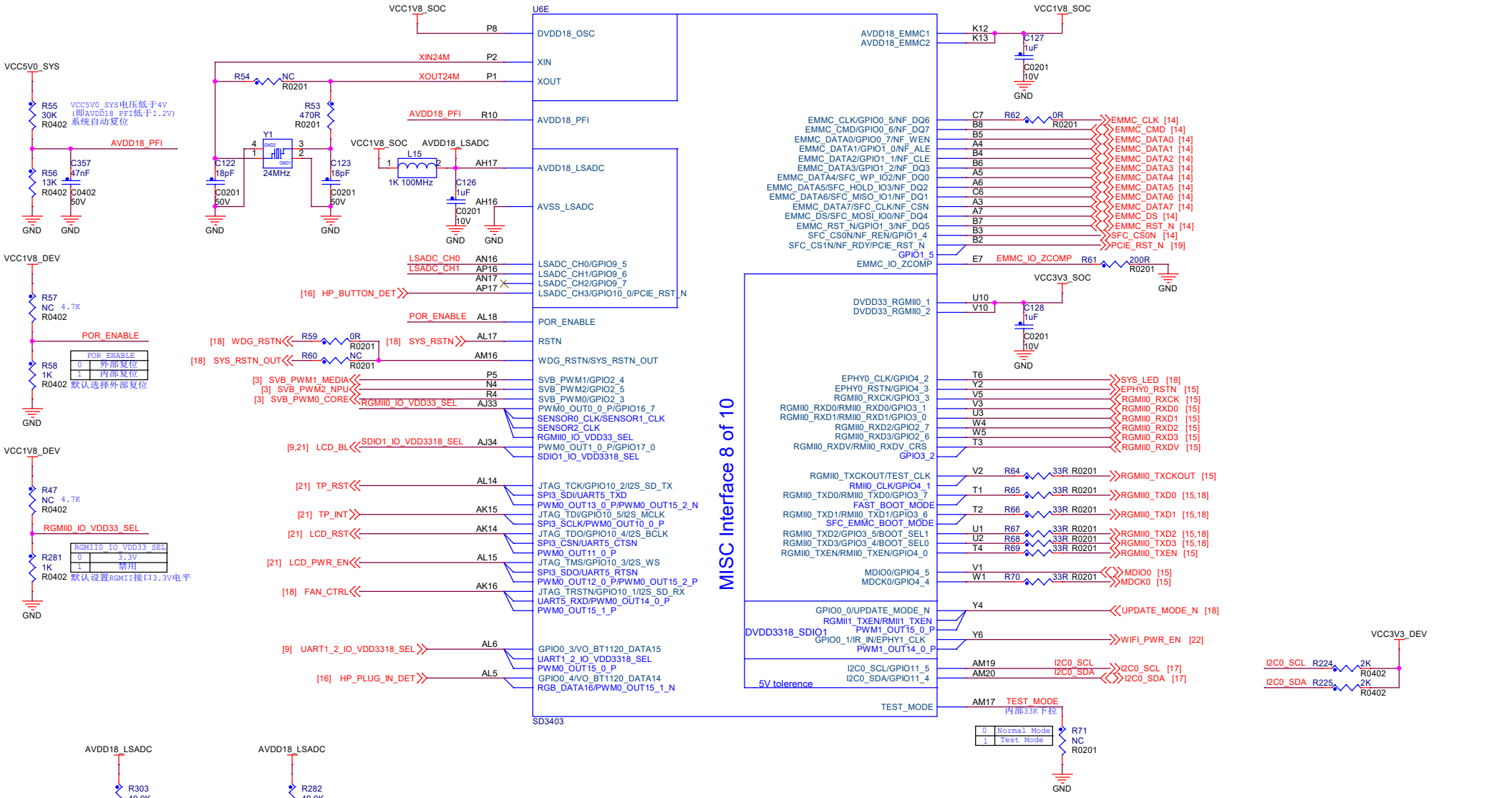

Size	Document Number	Rev
A3	SD3403 SYS	V1.0

Date: Wednesday, December 24, 2025 Sheet 6 of 22

东莞野火电子技术有限公司
https://yehuosm.tmall.com

Title: 野火鲁班猫SD3403(LubanCat-SD3403)

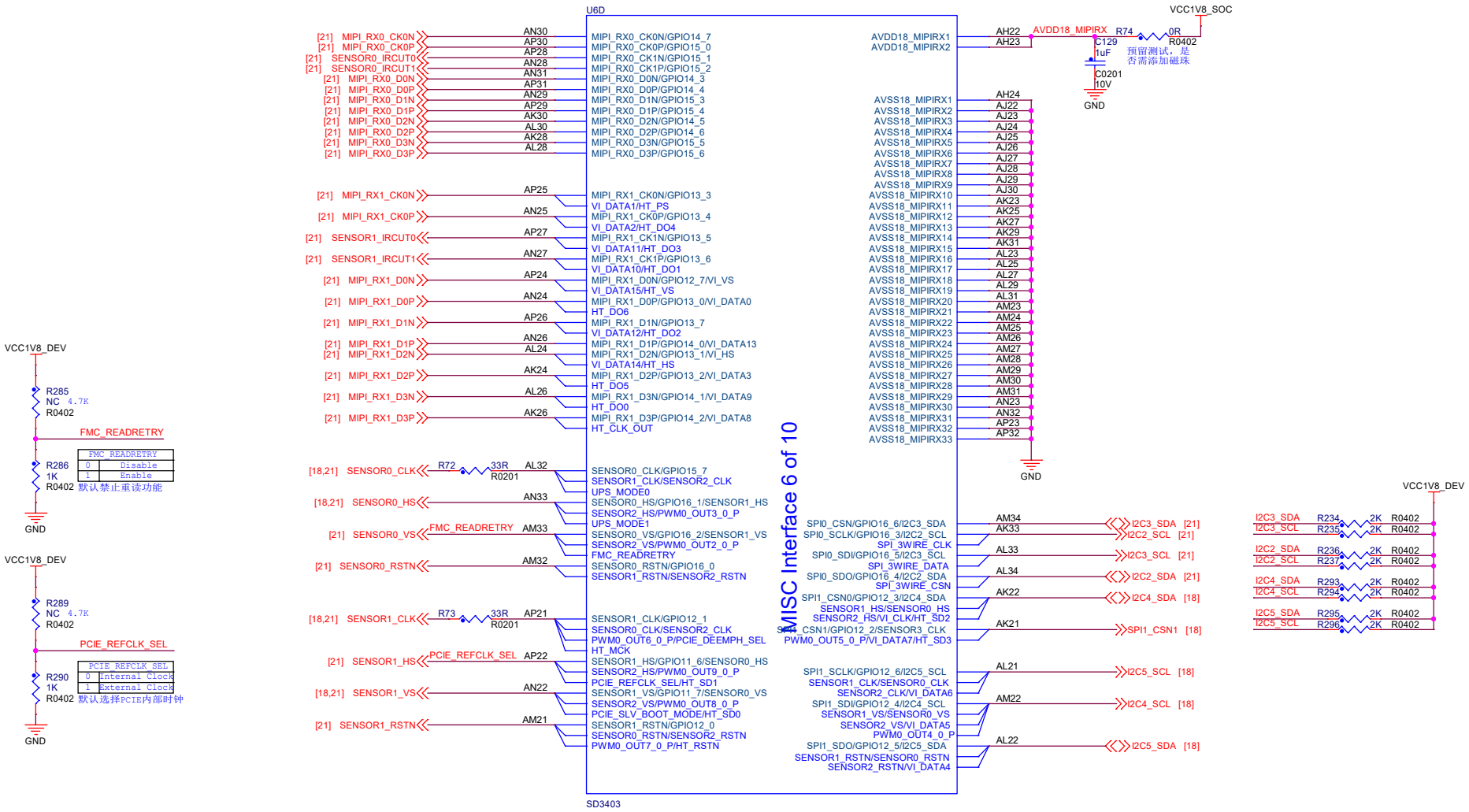

东莞野火电子技术有限公司 https://yehuosm.tmall.com		
Title	野火鲁班猫SD3403(LubanCat-SD3403)	
Size A3	Document Number SD3403 VI	Rev V1.0
Date: Saturday, October 18, 2025	Sheet 7 of 22	

SD3403 VO

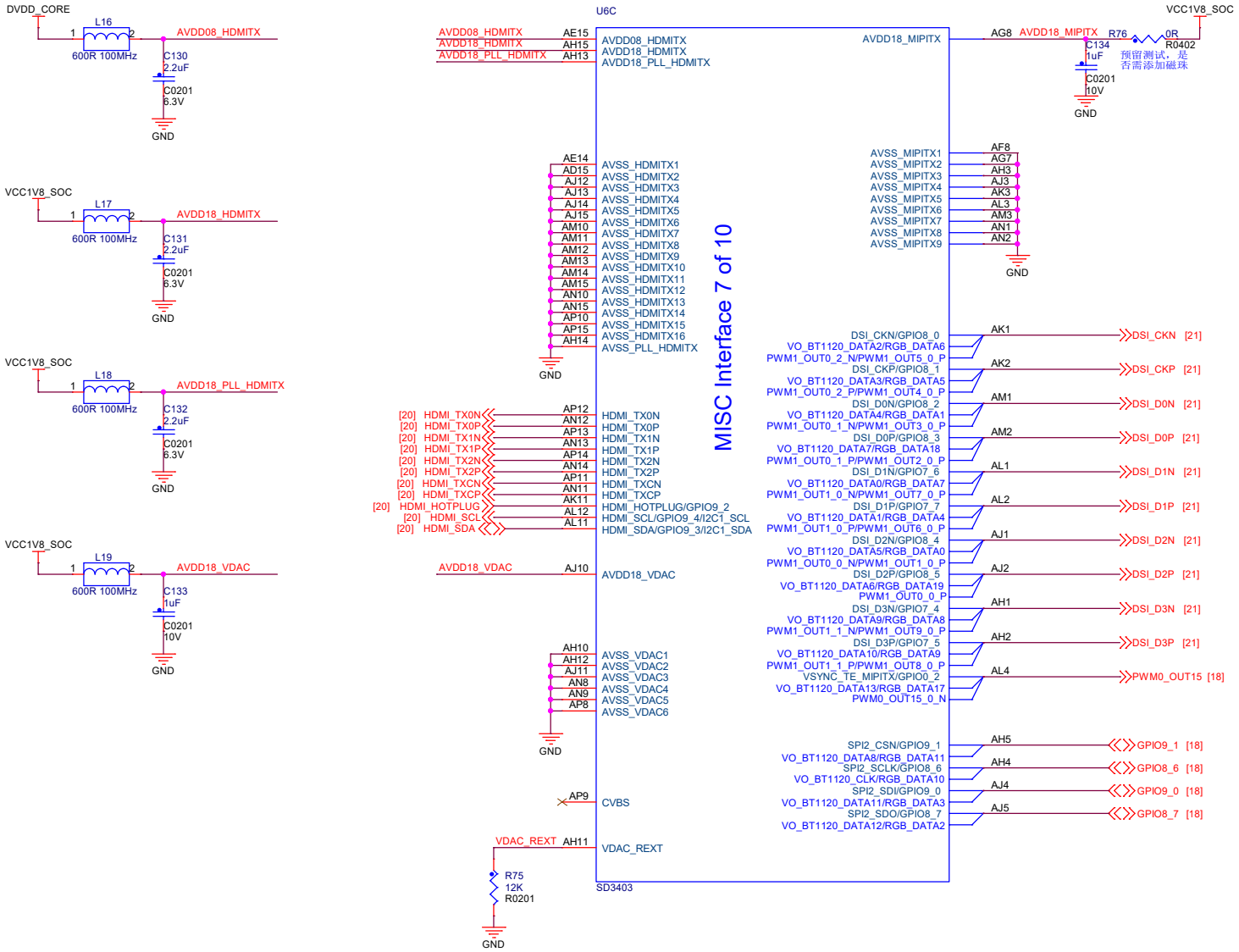

东莞野火电子技术有限公司 https://yehuosm.tmall.com		
Title	野火鲁班猫SD3403(LubanCat-SD3403)	
Size A3	Document Number SD3403 VO	Rev V1.0
Date: Saturday, October 18, 2025	Sheet 8 of 22	

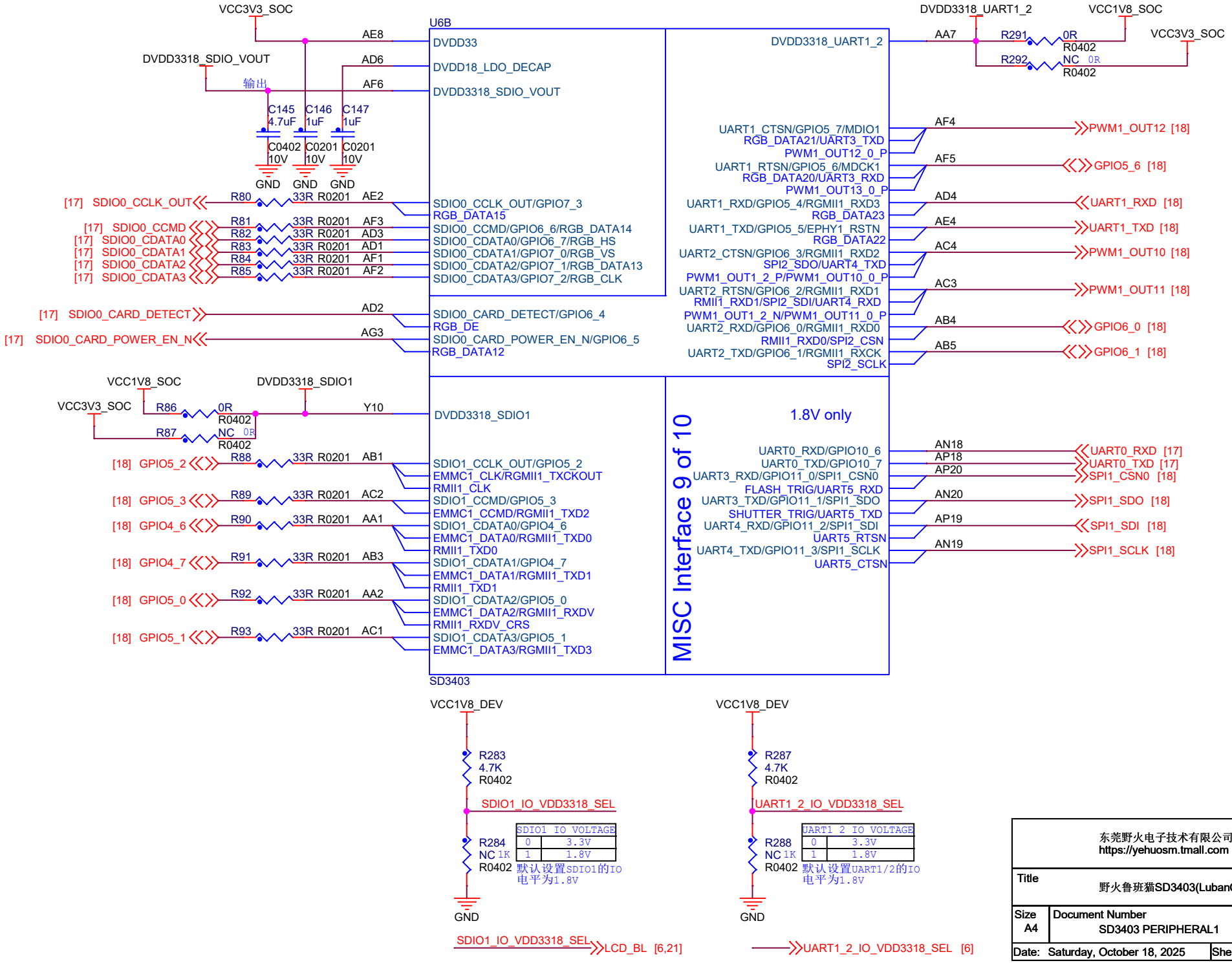

东莞野火电子技术有限公司 https://yehuosm.tmall.com		
Title	野火鲁班猫SD3403(LubanCat-SD3403)	
Size A4	Document Number SD3403 PERIPHERAL1	Rev V1.0
Date: Saturday, October 18, 2025	Sheet 9 of 22	

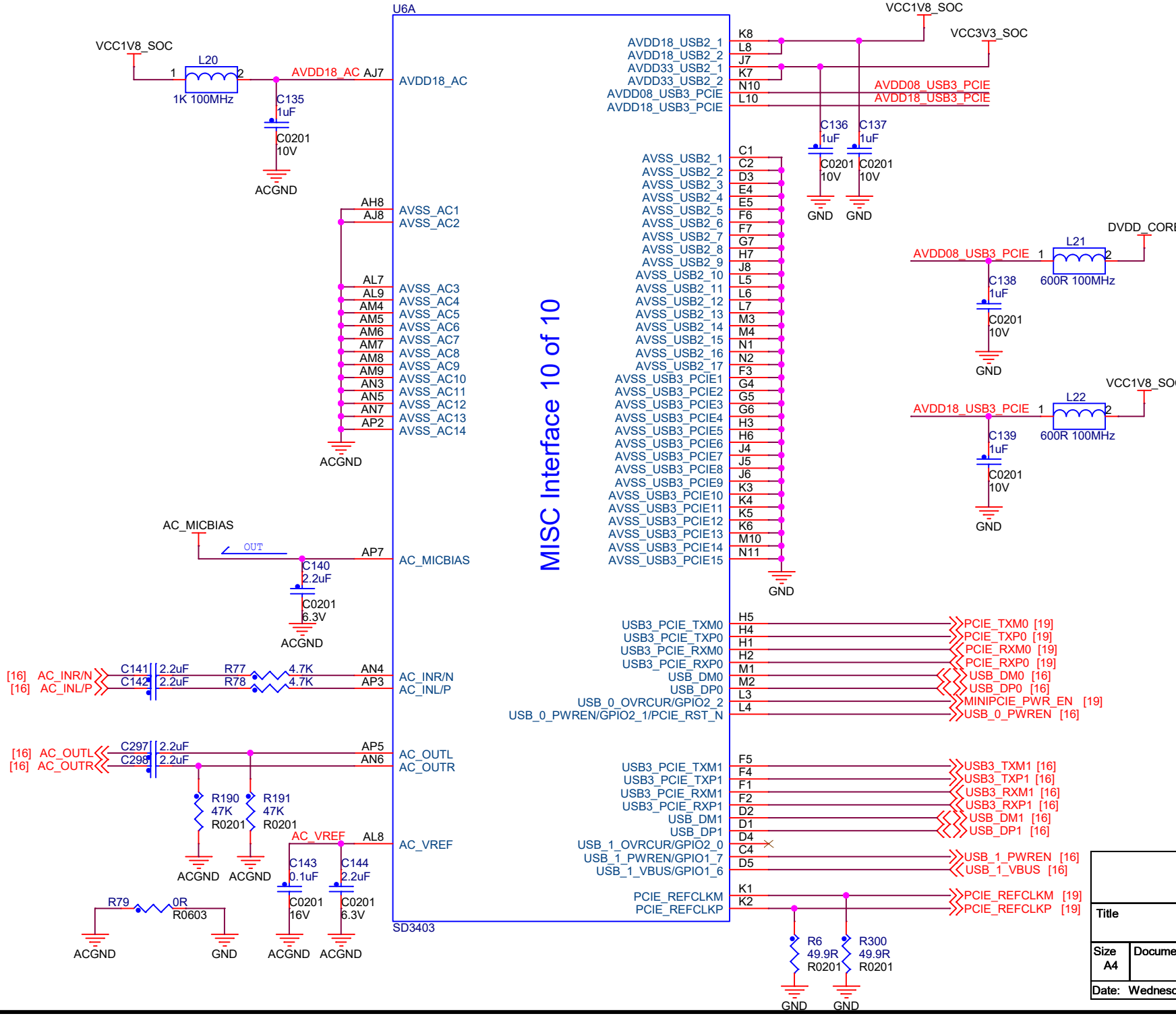

东莞野火电子技术有限公司 https://yehuosm.tmall.com		
Title	野火鲁班猫SD3403(LubanCat-SD3403)	
Size A4	Document Number SD3403 PERIPHERAL2	Rev V1.0
Date: Wednesday, December 24, 2025	Sheet 10 of 22	

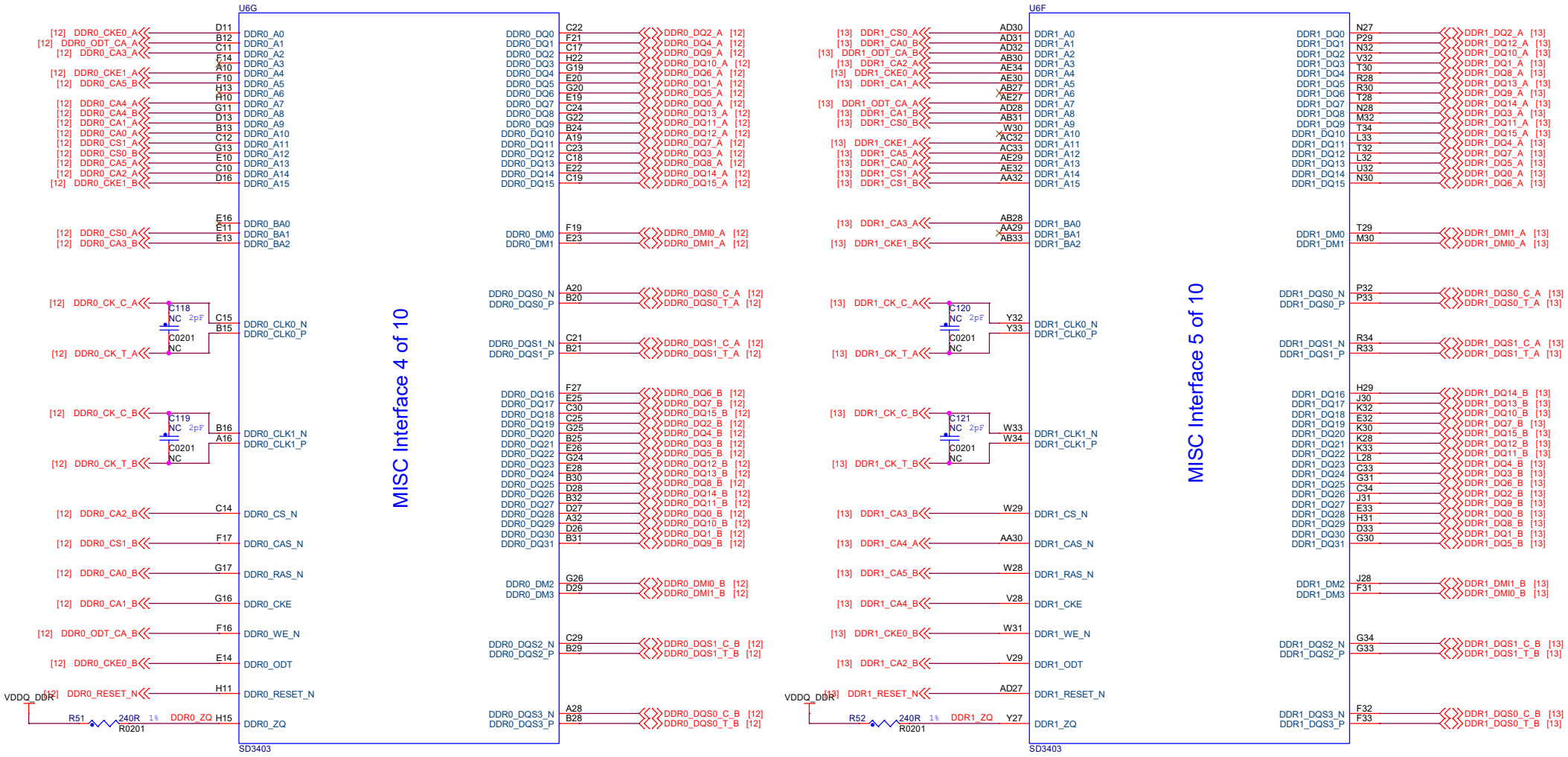

东莞野火电子技术有限公司 https://yehuosm.tmall.com		
Title	野火鲁班猫SD3403(LubanCat-SD3403)	
Size A3	Document Number SD3403 DDRC	Rev V1.0
Date: Saturday, October 18, 2025	Sheet 11 of 22	

LPDDR4/LPDDR4x_1

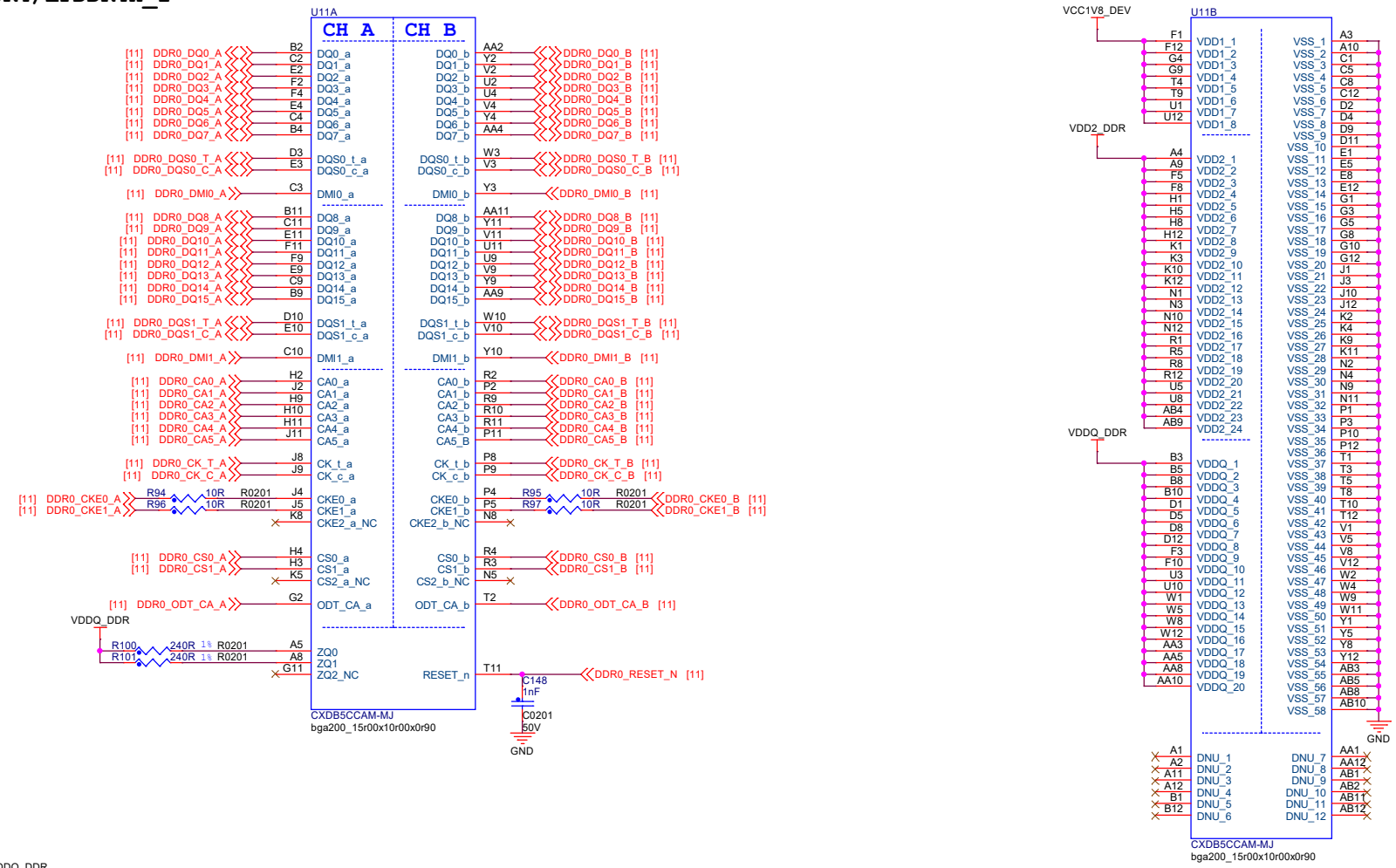

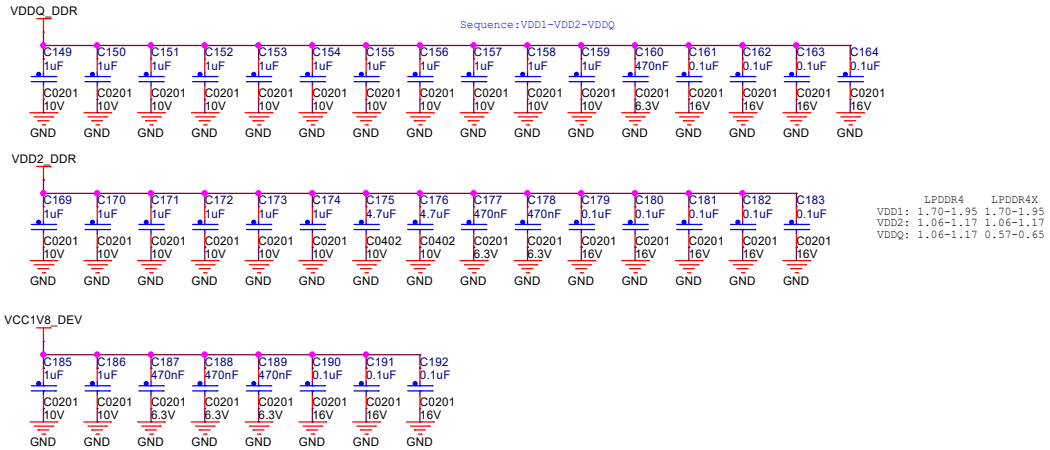

	LPDDR4	LPDDR4X
VDD1:	1.70-1.95	1.70-1.95
VDD2:	1.06-1.17	1.06-1.17
VDDQ:	1.06-1.17	0.57-0.65

东莞野火电子技术有限公司
https://yehuosm.tmall.com

Title: 野火鲁班猫SD3403(LubanCat-SD3403)

Size	Document Number	Rev
A3	LPDDR4/4x_1	V1.0

Date: Saturday, October 18, 2025 | Sheet 12 of 22

LPDDR4/LPDDR4x_2

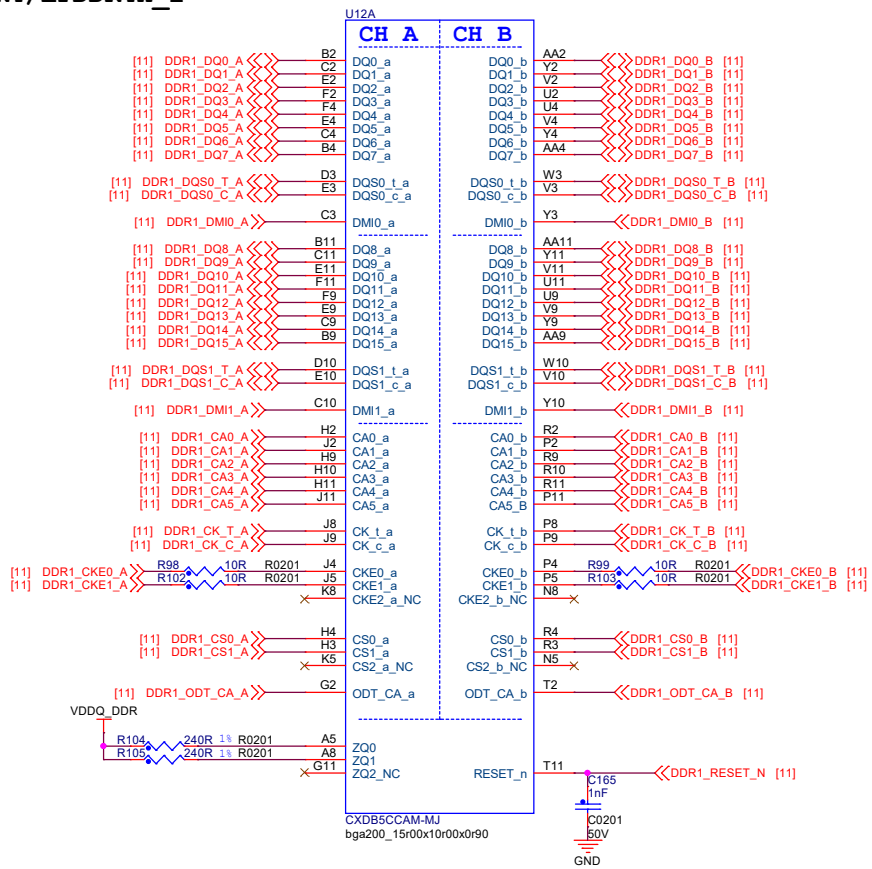

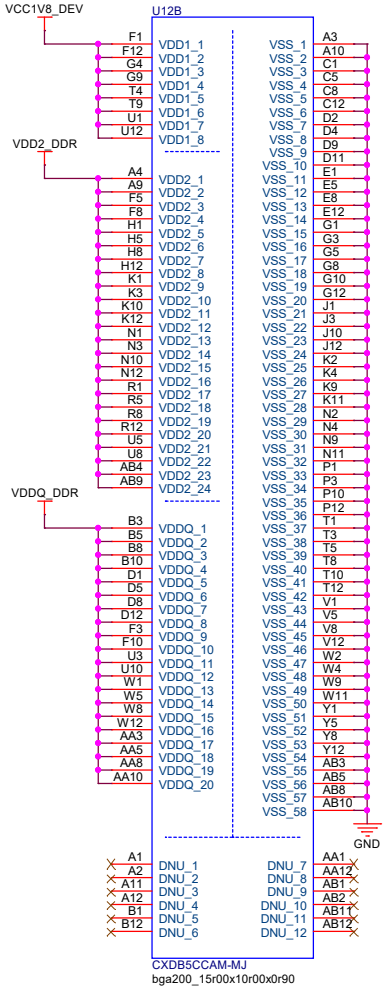

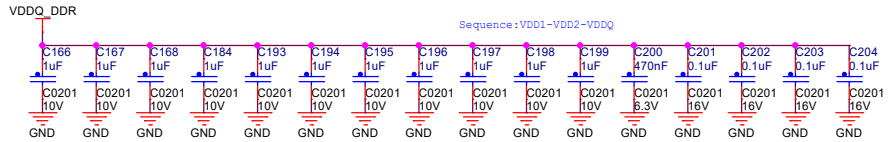

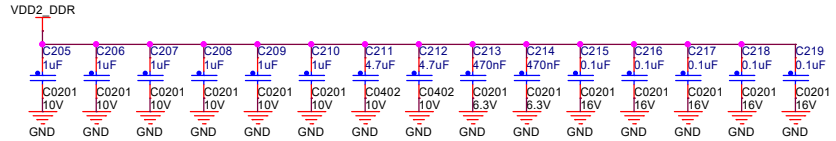

	LPDDR4	LPDDR4X
VDD1:	1.70-1.95	1.70-1.95
VDD2:	1.06-1.17	1.06-1.17
VDDQ:	1.06-1.17	0.57-0.65

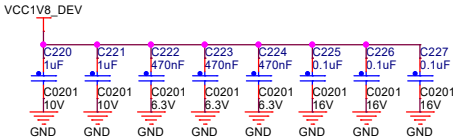

东莞野火电子技术有限公司 https://yehuosm.tmall.com		
Title: 野火鲁班猫SD3403(LubanCat-SD3403)		
Size: A3	Document Number: LPDDR4/4x_2	Rev: V1.0
Date: Saturday, October 18, 2025	Sheet 13 of 22	

EMMC FLASH

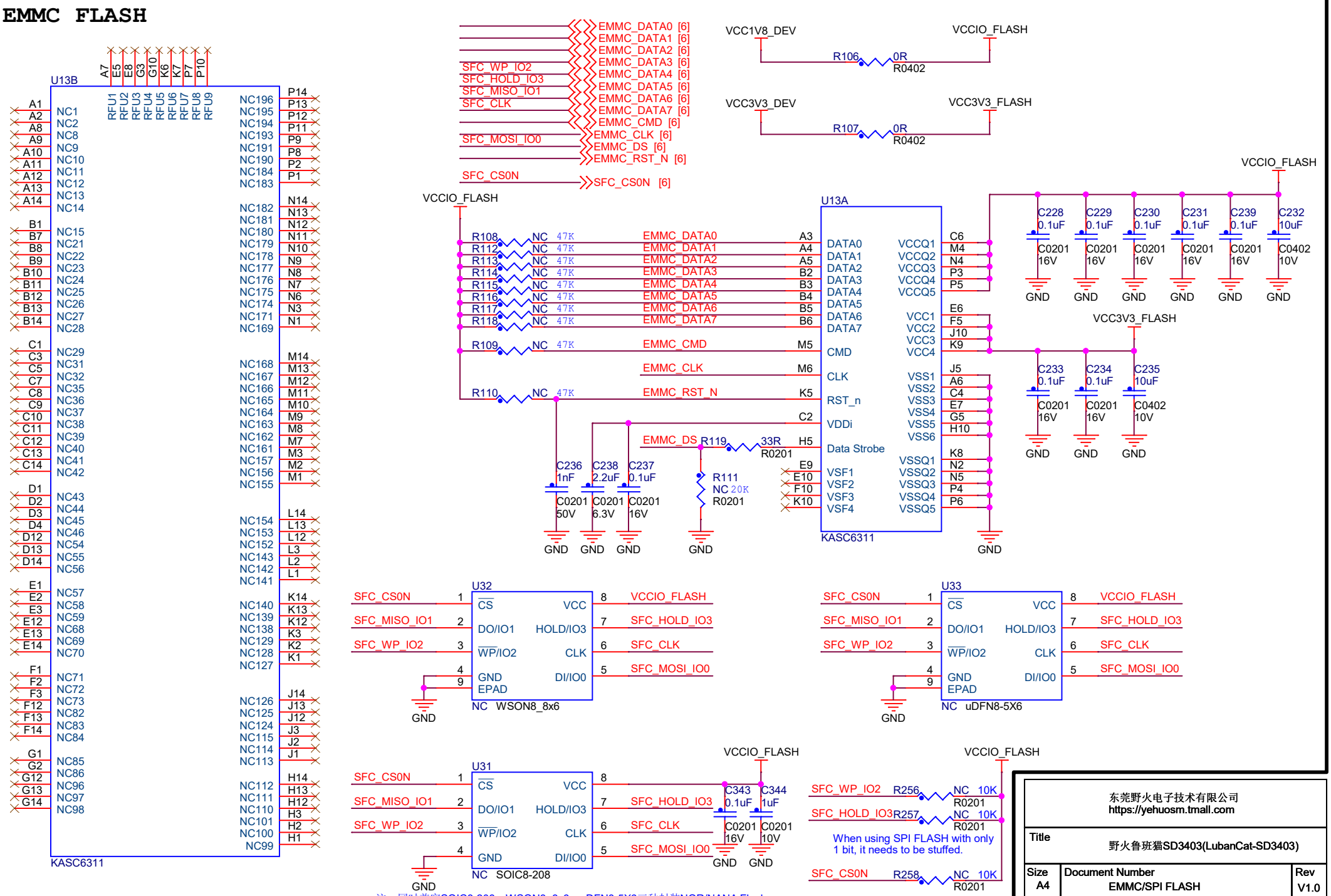

东莞野火电子技术有限公司 https://yehuosm.tmall.com		
Title	野火鲁班猫SD3403(LubanCat-SD3403)	
Size A4	Document Number EMMC/SPI FLASH	Rev V1.0
Date: Saturday, October 18, 2025	Sheet 14 of 22	

以太网

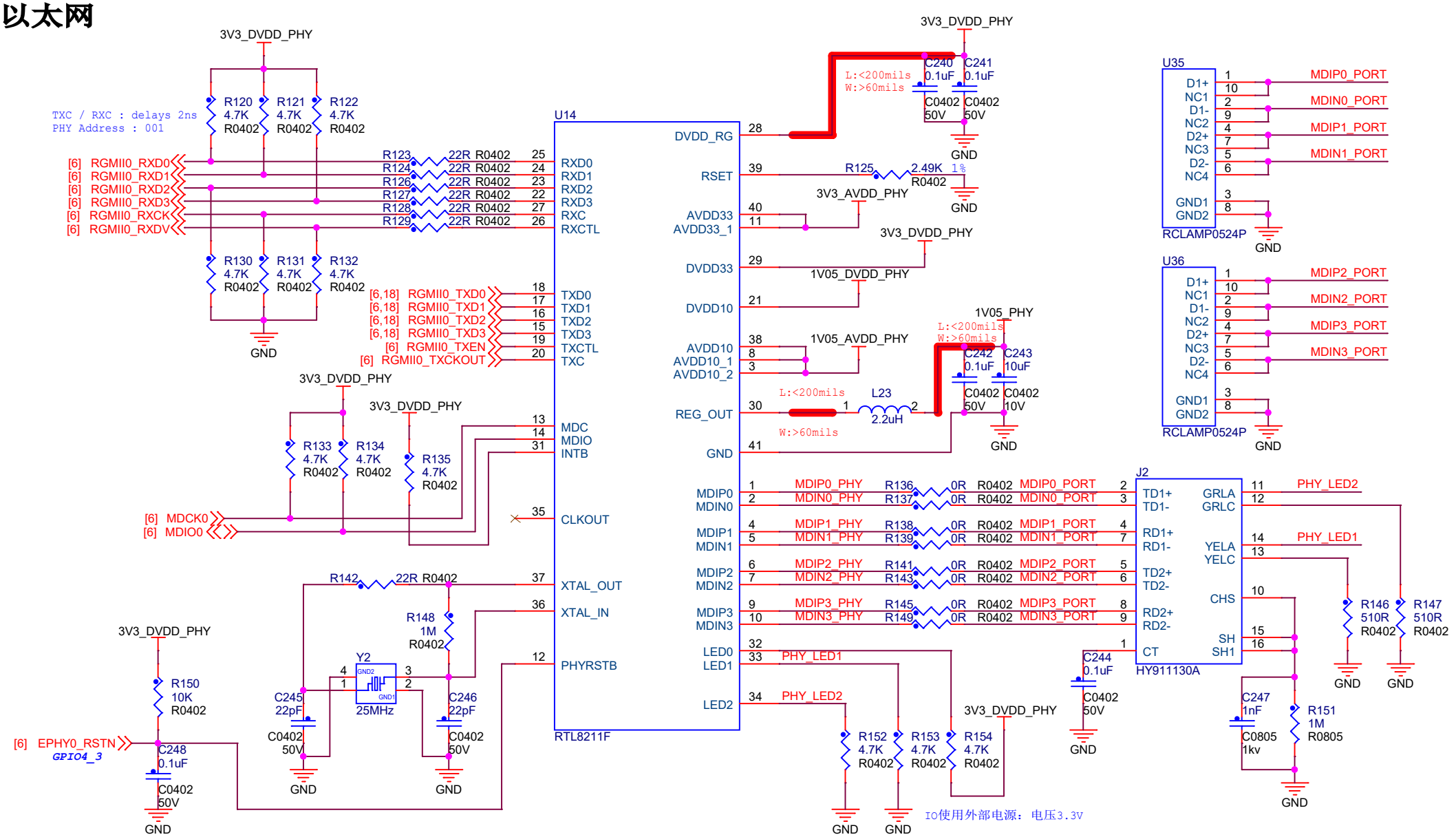

东莞野火电子技术有限公司 https://yehuosm.tmall.com		
Title	野火鲁班猫SD3403(LubanCat-SD3403)	
Size A4	Document Number 以太网	Rev V1.0
Date: Saturday, October 18, 2025	Sheet 15 of 22	

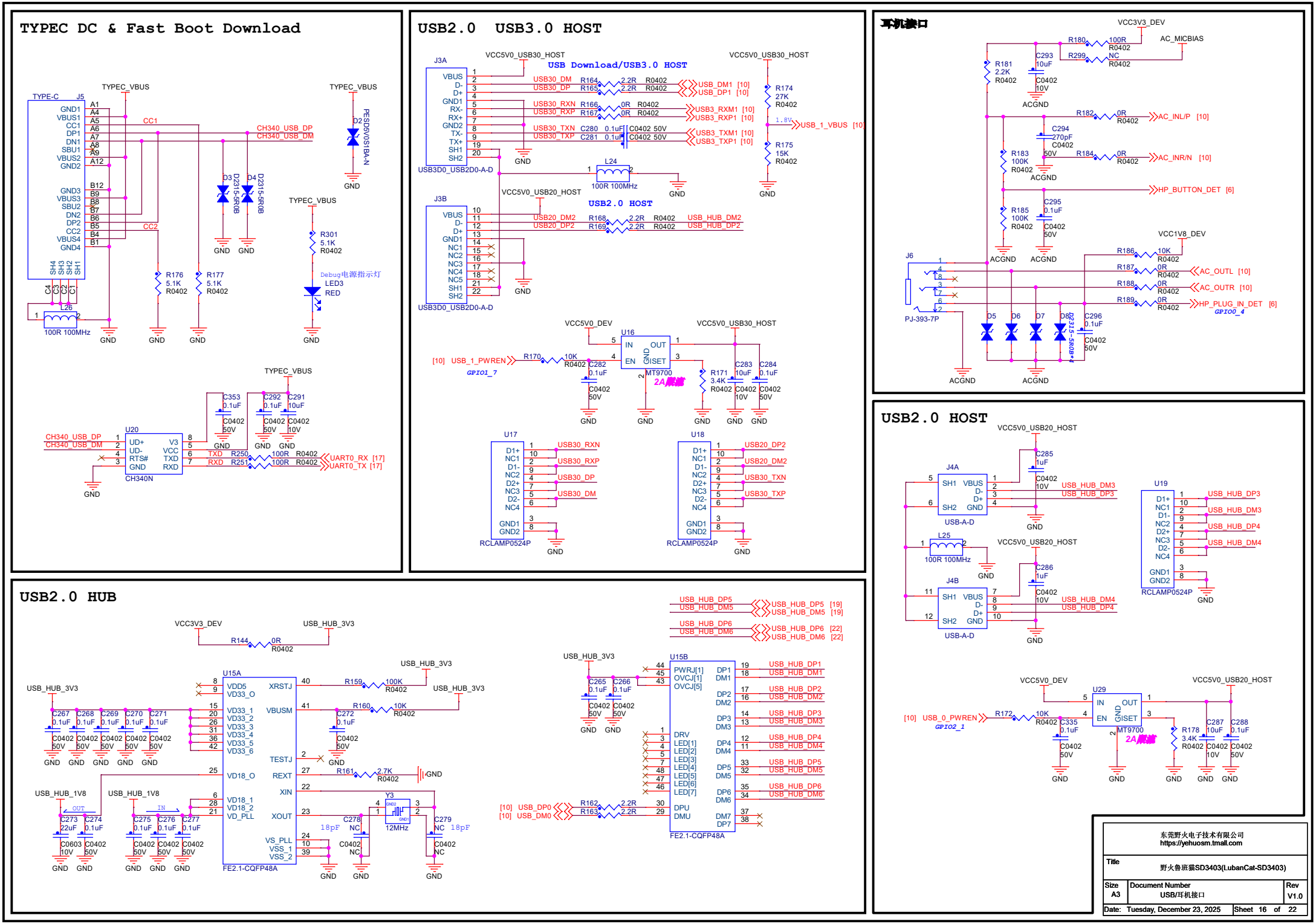
TYPEC DC & Fast Boot Download
TYPE-C J5
TYPEC_VBUS
CC1
CC2
CH340_USB_DP
CH340_USB_DM
PESD5V0S1BA-N
D2
D3 D2315-5R0B
D4 D2315-5R0B
R176 5.1K R0402
R177 5.1K R0402
R301 5.1K R0402
Debug电源指示灯
LED3 RED
L26 100R 100MHz
GND
U20
CH340N
UD+ UD- RTS# GND V3 VCC TXD RXD
C353 0.1uF C0402 50V
C292 0.1uF C0402 50V
C291 10uF C0402 10V
TXD R250 100R R0402
RXD R251 100R R0402
UART0_RX [17]
UART0_TX [17]
USB2.0 USB3.0 HOST
J3A
USB3D0_USB2D0-A-D
VCC5V0_USB30_HOST
USB Download/USB3.0 HOST
USB30_DM USB30_DP
USB30_RXN USB30_RXP
USB30_TXN USB30_TXP
R164 2.2R R0402
R165 2.2R R0402
R166 0R R0402
R167 0R R0402
C280 0.1uF C0402 50V
C281 0.1uF C0402 50V
USB_DM1 [10]
USB_DP1 [10]
USB3_RXM1 [10]
USB3_RXP1 [10]
USB3_TXM1 [10]
USB3_TXP1 [10]
R174 27K R0402
R175 15K R0402
1.8V
USB_1_VBUS [10]
L24 100R 100MHz
J3B
VCC5V0_USB20_HOST
USB2.0 HOST
USB20_DM2 USB20_DP2
R168 2.2R R0402
R169 2.2R R0402
USB_HUB_DM2
USB_HUB_DP2
VCC5V0_DEV
U16
MT9700
2A顺流
IN EN OUT GND ISET
[10] USB_1_PWREN
GPIO1_7
R170 10K R0402
C282 0.1uF C0402 50V
R171 3.4K R0402
C283 10uF C0402 10V
C284 0.1uF C0402 50V
U17
RCLAMP0524P
D1+ NC1 D1- NC2 D2+ NC3 D2- NC4 GND1 GND2
USB30_RXN USB30_RXP USB30_DP USB30_DM
U18
USB20_DP2 USB20_DM2 USB30_TXN USB30_TXP
耳机接口
VCC3V3_DEV
AC_MICBIAS
R180 100R R0402
R299 NC R0402
R181 2.2K R0402
C293 10uF C0402 10V
ACGND
R182 0R R0402
AC_INL/P [10]
C294 270pF C0402 50V
R184 0R R0402
AC_INR/N [10]
R183 100K R0402
HP_BUTTON_DET [6]
C295 0.1uF C0402 50V
R185 100K R0402
VCC1V8_DEV
J6
PJ-393-7P
R186 10K R0402
R187 0R R0402
R188 0R R0402
R189 0R R0402
AC_OUTL [10]
AC_OUTR [10]
HP_PLUG_IN_DET [6]
GPIO0_4
D5 D6 D7 D8 D2315-5R0B*4
C296 0.1uF C0402 50V
USB2.0 HOST
VCC5V0_USB20_HOST
J4A
USB-A-D
SH1 VBUS D- D+ SH2 GND
C285 1uF C0402 10V
USB_HUB_DM3
USB_HUB_DP3
L25 100R 100MHz
J4B
C286 1uF C0402 10V
USB_HUB_DM4
USB_HUB_DP4
U19
RCLAMP0524P
USB_HUB_DP3 USB_HUB_DM3 USB_HUB_DP4 USB_HUB_DM4
VCC5V0_DEV
U29
MT9700
2A顺流
[10] USB_0_PWREN
GPIO2_1
R172 10K R0402
C335 0.1uF C0402 50V
R178 3.4K R0402
C287 10uF C0402 10V
C288 0.1uF C0402 50V
USB2.0 HUB
VCC3V3_DEV
USB_HUB_3V3
R144 0R R0402
U15A
FE2.1-CQFP48A
VDD5 VDD33_O VDD33_1 VDD33_2 VDD33_3 VDD33_4 VDD33_5 VDD33_6 VD18_O VD18_1 VD18_2 VD_PLL
XRSTJ VBUSM TESTJ REXT XIN XOUT VS_PLL VSS_1 VSS_2
R159 100K R0402
R160 10K R0402
C272 0.1uF C0402 50V
R161 2.7K R0402
Y3 12MHz
C278 NC 18pF
C279 NC 18pF
C0402 NC
C267 0.1uF C268 0.1uF C269 0.1uF C270 0.1uF C271 0.1uF C0402 50V
USB_HUB_1V8
OUT
IN
C273 22uF C0603 10V
C274 0.1uF C0402 50V
C275 0.1uF C276 0.1uF C277 0.1uF C0402 50V
USB_HUB_DP5 USB_HUB_DM5 [19]
USB_HUB_DP6 USB_HUB_DM6 [22]
U15B
FE2.1-CQFP48A
PWRJ[1] OVCJ[1] OVCJ[5] DRV LED[1] LED[2] LED[3] LED[4] LED[5] LED[6] LED[7] DPU DMU
DP1 DM1 DP2 DM2 DP3 DM3 DP4 DM4 DP5 DM5 DP6 DM6 DM7 DP7
USB_HUB_DP1 USB_HUB_DM1 USB_HUB_DP2 USB_HUB_DM2 USB_HUB_DP3 USB_HUB_DM3 USB_HUB_DP4 USB_HUB_DM4 USB_HUB_DP5 USB_HUB_DM5 USB_HUB_DP6 USB_HUB_DM6
[10] USB_DP0
[10] USB_DM0
R162 2.2R R163 2.2R
C265 0.1uF C266 0.1uF C0402 50V
东莞野火电子技术有限公司
https://yehuosm.tmall.com
Title
野火鲁班猫SD3403(LubanCat-SD3403)
Size A3
Document Number USB/耳机接口
Rev V1.0
Date: Tuesday, December 23, 2025
Sheet 16 of 22

SD Card

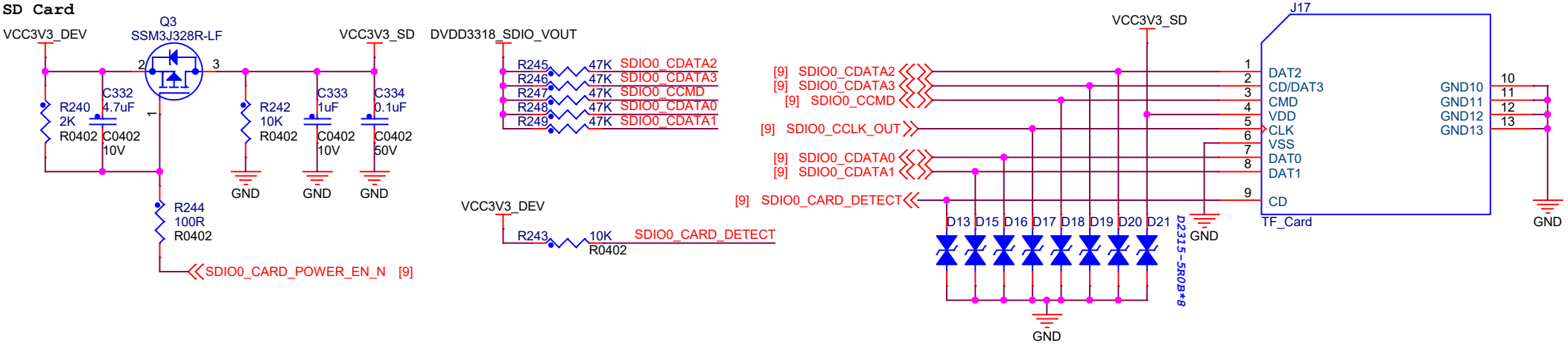

Debug接口电平转换

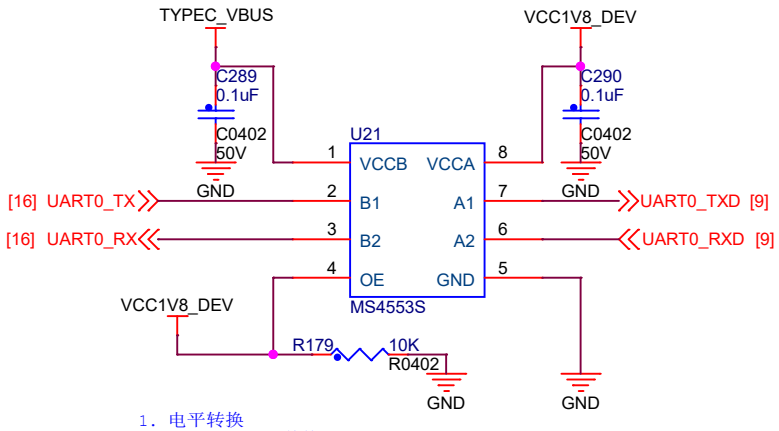

1. 电平转换
2. 可PIN TO PIN替换的芯片：RS0102YH8(润石)、GT0102S8(谷太微)

RTC

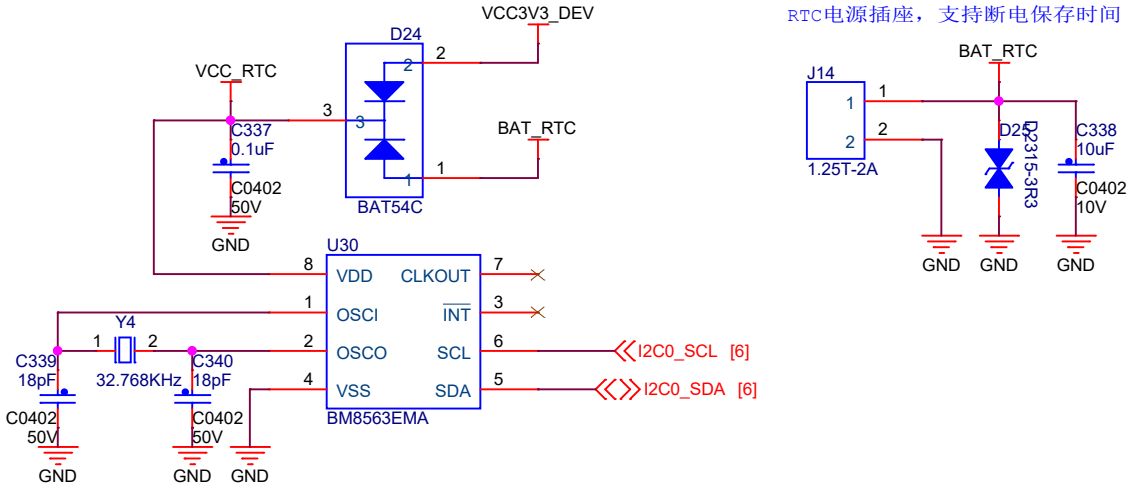

东莞野火电子技术有限公司 https://yehuosm.tmall.com		
Title	野火鲁班猫SD3403(LubanCat-SD3403)	
Size A4	Document Number SD Card/Debug/RTC	Rev V1.0
Date: Tuesday, December 23, 2025	Sheet 17 of 22	

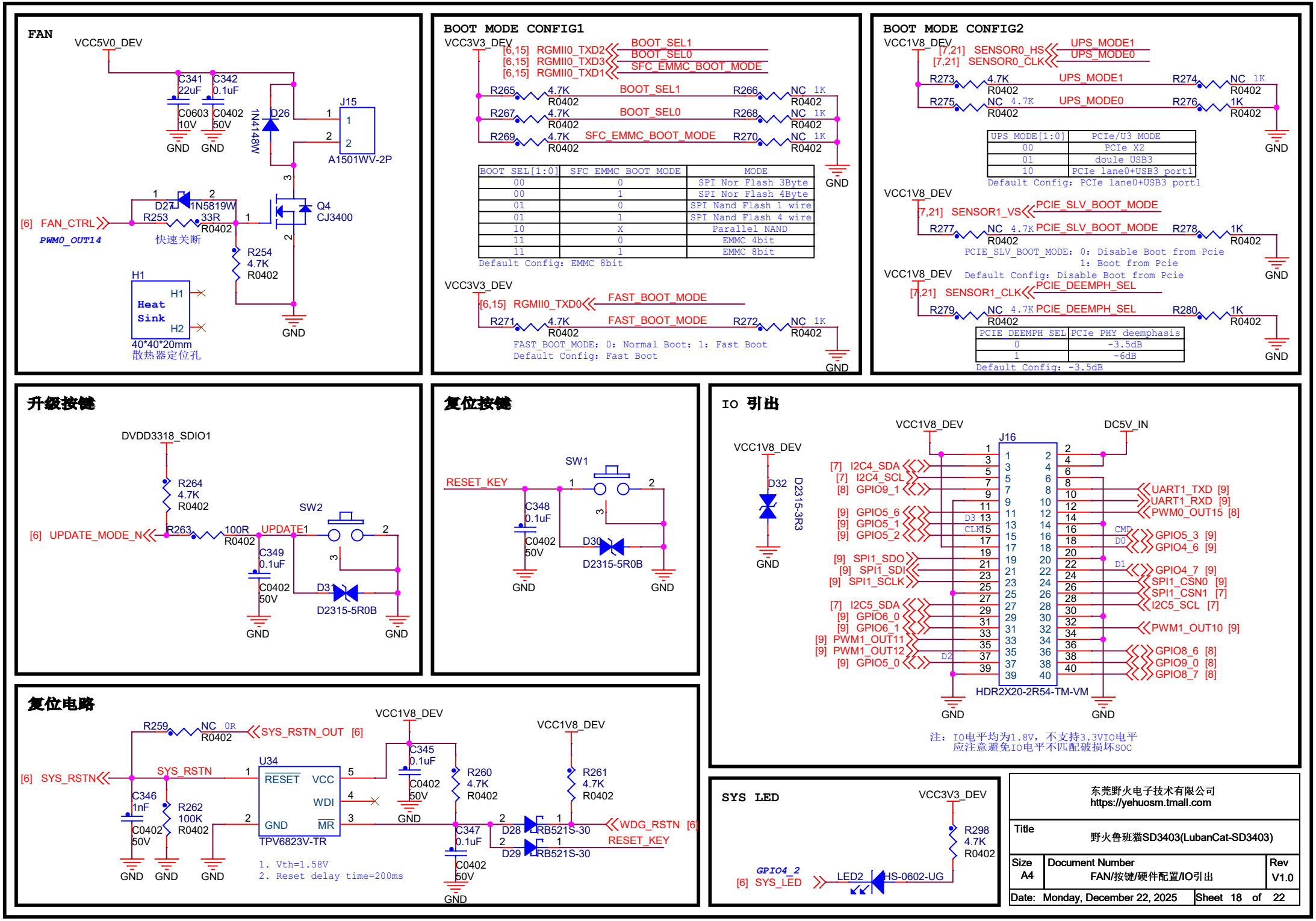
FAN
VCC5V0_DEV
C341 22uF
C342 0.1uF
C0603 10V
C0402 50V
GND GND
D26 1N4148W
J15
A1501WV-2P
D27 1N5819W
[6] FAN_CTRL
PWM0_OUT14
R253 33R R0402
快速关断
Q4 CJ3400
R254 4.7K R0402
H1
Heat Sink
40*40*20mm
散热器定位孔
GND
BOOT MODE CONFIG1
VCC3V3_DEV
[6,15] RGMII0_TXD2 BOOT_SEL1
[6,15] RGMII0_TXD3 BOOT_SEL0
[6,15] RGMII0_TXD1 SFC_EMMC_BOOT_MODE
R265 4.7K R0402 BOOT_SEL1 R266 NC 1K R0402
R267 4.7K R0402 BOOT_SEL0 R268 NC 1K R0402
R269 4.7K R0402 SFC_EMMC_BOOT_MODE R270 NC 1K R0402
BOOT_SEL[1:0] | SFC_EMMC_BOOT_MODE | MODE
00 | 0 | SPI Nor Flash 3Byte
00 | 1 | SPI Nor Flash 4Byte
01 | 0 | SPI Nand Flash 1 wire
01 | 1 | SPI Nand Flash 4 wire
10 | X | Parallel NAND
11 | 0 | EMMC 4bit
11 | 1 | EMMC 8bit
Default Config: EMMC 8bit
VCC3V3_DEV
[6,15] RGMII0_TXD0 FAST_BOOT_MODE
R271 4.7K R0402 FAST_BOOT_MODE R272 NC 1K R0402
FAST_BOOT_MODE: 0: Normal Boot; 1: Fast Boot
Default Config: Fast Boot
GND
BOOT MODE CONFIG2
VCC1V8_DEV
[7,21] SENSOR0_HS UPS_MODE1
[7,21] SENSOR0_CLK UPS_MODE0
R273 4.7K R0402 UPS_MODE1 R274 NC 1K R0402
R275 NC 4.7K R0402 UPS_MODE0 R276 1K R0402
UPS_MODE[1:0] | PCIe/U3 MODE
00 | PCIe X2
01 | doule USB3
10 | PCIe lane0+USB3 port1
Default Config: PCIe lane0+USB3 port1
VCC1V8_DEV
[7,21] SENSOR1_VS PCIE_SLV_BOOT_MODE
R277 NC 4.7K R0402 PCIE_SLV_BOOT_MODE R278 1K R0402
PCIE_SLV_BOOT_MODE: 0: Disable Boot from Pcie
1: Boot from Pcie
Default Config: Disable Boot from Pcie
VCC1V8_DEV
[7,21] SENSOR1_CLK PCIE_DEEMPH_SEL
R279 NC 4.7K R0402 PCIE_DEEMPH_SEL R280 1K R0402
PCIE_DEEMPH_SEL | PCIe PHY deemphasis
0 | -3.5dB
1 | -6dB
Default Config: -3.5dB
升级按键
DVDD3318_SDIO1
R264 4.7K R0402
[6] UPDATE_MODE_N
R263 100R R0402
UPDATE
SW2
C349 0.1uF
C0402 50V
D31 D2315-5R0B
GND GND
复位按键
SW1
RESET_KEY
C348 0.1uF
C0402 50V
D30 D2315-5R0B
GND GND
IO 引出
VCC1V8_DEV
DC5V_IN
J16
D32 D2315-3R3
[7] I2C4_SDA
[7] I2C4_SCL
[8] GPIO9_1
[9] GPIO5_6
[9] GPIO5_1
[9] GPIO5_2
[9] SPI1_SDO
[9] SPI1_SDI
[9] SPI1_SCLK
[7] I2C5_SDA
[9] GPIO6_0
[9] GPIO6_1
[9] PWM1_OUT11
[9] PWM1_OUT12
[9] GPIO5_0
UART1_TXD [9]
UART1_RXD [9]
PWM0_OUT15 [8]
GPIO5_3 [9]
GPIO4_6 [9]
GPIO4_7 [9]
SPI1_CSN0 [9]
SPI1_CSN1 [7]
I2C5_SCL [7]
PWM1_OUT10 [9]
GPIO8_6 [8]
GPIO9_0 [8]
GPIO8_7 [8]
HDR2X20-2R54-TM-VM
注：IO电平均为1.8V，不支持3.3VIO电平
应注意避免IO电平不匹配破损SOC
复位电路
R259 NC 0R R0402 SYS_RSTN_OUT [6]
VCC1V8_DEV
[6] SYS_RSTN
SYS_RSTN
U34
RESET VCC WDI GND MR
TPV6823V-TR
C345 0.1uF
C0402 50V
R260 4.7K R0402
R261 4.7K R0402
C346 1nF
C0402 50V
R262 100K R0402
C347 0.1uF
C0402 50V
D28 LRB521S-30
D29 LRB521S-30
WDG_RSTN [6]
RESET_KEY
1. Vth=1.58V
2. Reset delay time=200ms
GND GND GND
SYS LED
VCC3V3_DEV
R298 4.7K R0402
GPIO4_2
[6] SYS_LED
LED2 HS-0602-UG
东莞野火电子技术有限公司
https://yehuosm.tmall.com
Title
野火鲁班猫SD3403(LubanCat-SD3403)
Size A4
Document Number
FAN/按键/硬件配置/IO引出
Rev V1.0
Date: Monday, December 22, 2025
Sheet 18 of 22

MINI PCIE POWER

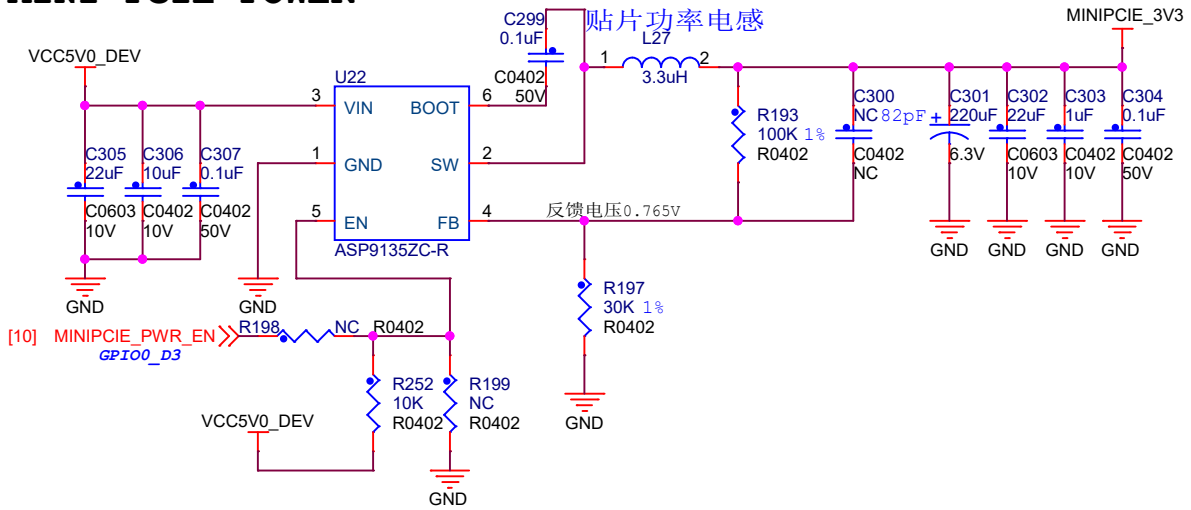

SIM CARD

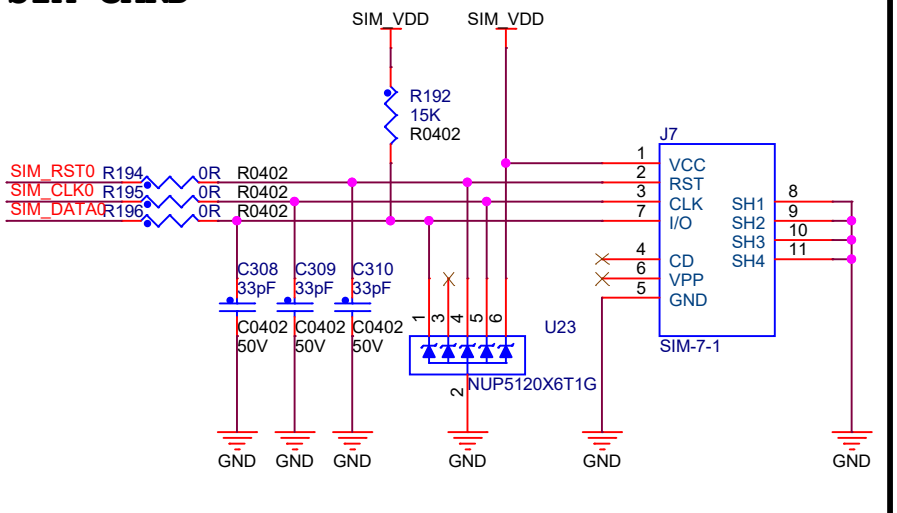

MINI PCIE

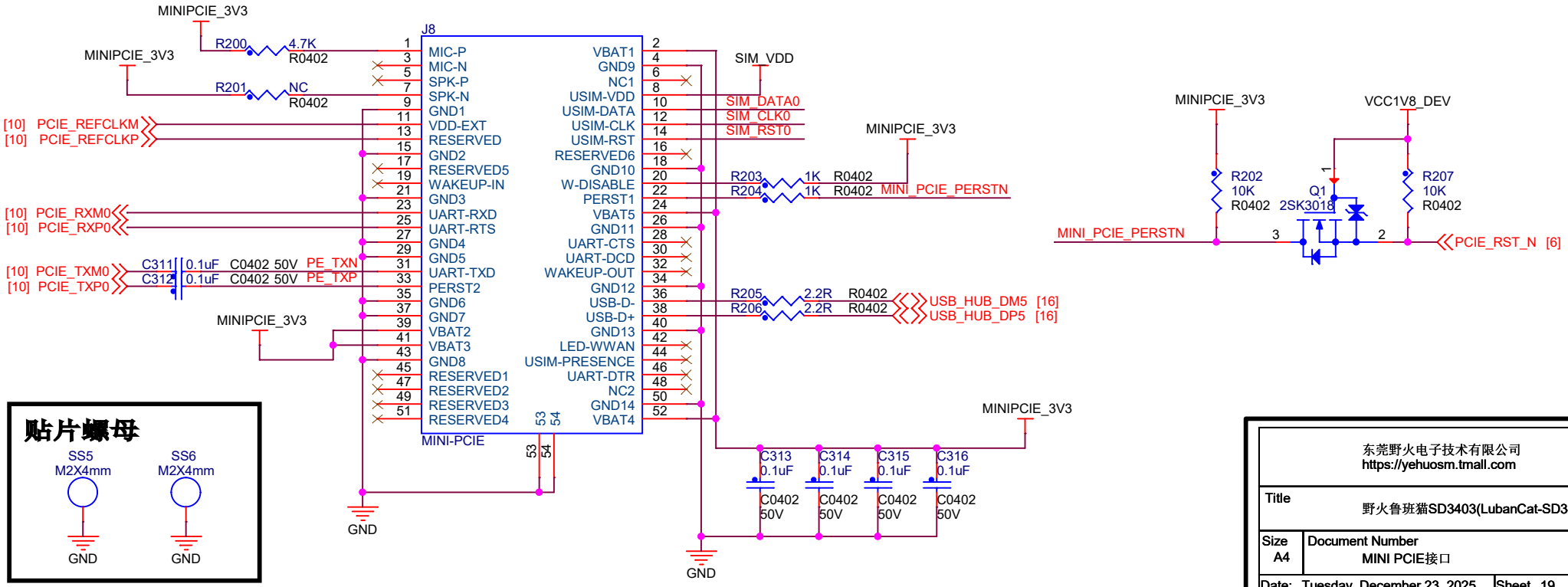

贴片螺母

东莞野火电子技术有限公司 https://yehuosm.tmall.com		
Title	野火鲁班猫SD3403(LubanCat-SD3403)	
Size A4	Document Number MINI PCIE接口	Rev V1.0
Date: Tuesday, December 23, 2025	Sheet 19 of 22	

HDMI接口

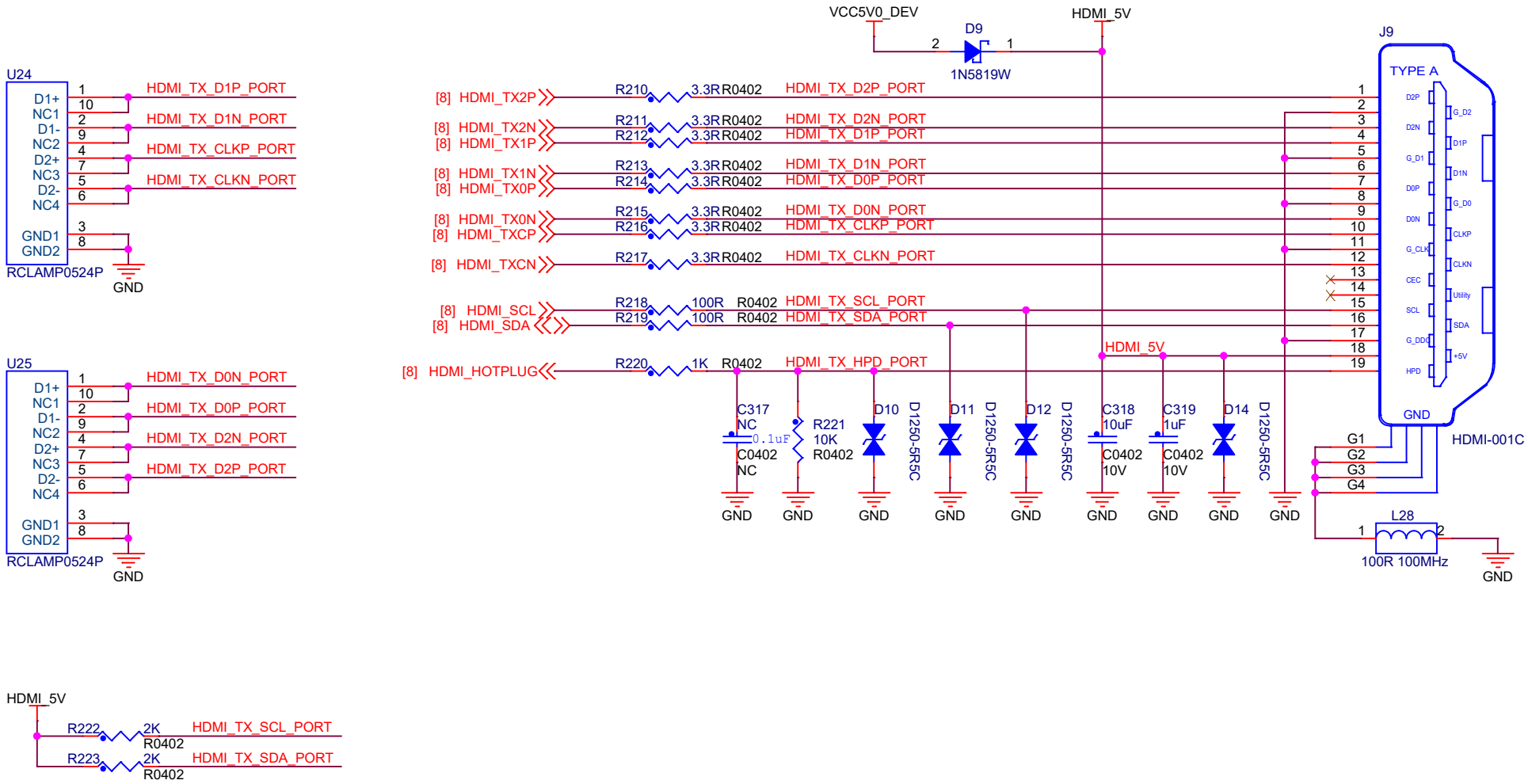

东莞野火电子技术有限公司 https://yehuosm.tmall.com		
Title	野火鲁班猫SD3403(LubanCat-SD3403)	
Size A4	Document Number HDMI接口	Rev V1.0
Date: Saturday, October 18, 2025	Sheet 20 of 22	

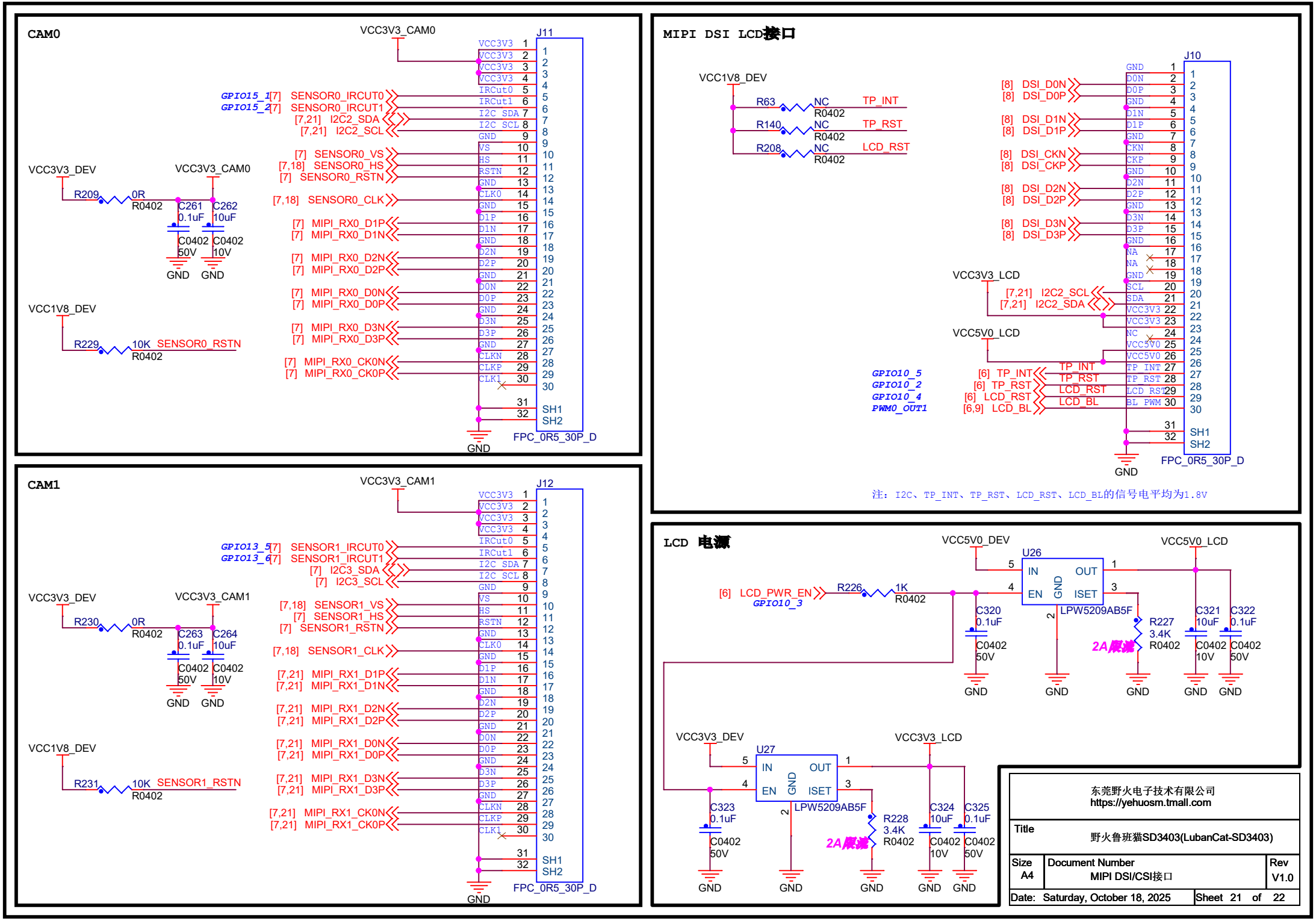
CAM0
VCC3V3_CAM0
J11
VCC3V3_DEV
R209
0R
R0402
C261
0.1uF
C262
10uF
C0402
50V
C0402
10V
GND
VCC1V8_DEV
R229
10K
SENSOR0_RSTN
R0402
GPIO15_1 [7] SENSOR0_IRCUT0
GPIO15_2 [7] SENSOR0_IRCUT1
[7,21] I2C2_SDA
[7,21] I2C2_SCL
[7] SENSOR0_VS
[7,18] SENSOR0_HS
[7] SENSOR0_RSTN
[7,18] SENSOR0_CLK
[7] MIPI_RX0_D1P
[7] MIPI_RX0_D1N
[7] MIPI_RX0_D2N
[7] MIPI_RX0_D2P
[7] MIPI_RX0_D0N
[7] MIPI_RX0_D0P
[7] MIPI_RX0_D3N
[7] MIPI_RX0_D3P
[7] MIPI_RX0_CK0N
[7] MIPI_RX0_CK0P
FPC_0R5_30P_D
CAM1
VCC3V3_CAM1
J12
VCC3V3_DEV
R230
0R
R0402
C263
0.1uF
C264
10uF
C0402
50V
C0402
10V
GND
VCC1V8_DEV
R231
10K
SENSOR1_RSTN
R0402
GPIO13_5 [7] SENSOR1_IRCUT0
GPIO13_6 [7] SENSOR1_IRCUT1
[7] I2C3_SDA
[7] I2C3_SCL
[7,18] SENSOR1_VS
[7] SENSOR1_HS
[7] SENSOR1_RSTN
[7,18] SENSOR1_CLK
[7,21] MIPI_RX1_D1P
[7,21] MIPI_RX1_D1N
[7,21] MIPI_RX1_D2N
[7,21] MIPI_RX1_D2P
[7,21] MIPI_RX1_D0N
[7,21] MIPI_RX1_D0P
[7,21] MIPI_RX1_D3N
[7,21] MIPI_RX1_D3P
[7,21] MIPI_RX1_CK0N
[7,21] MIPI_RX1_CK0P
FPC_0R5_30P_D
MIPI DSI LCD接口
J10
VCC1V8_DEV
R63 NC R0402 TP_INT
R140 NC R0402 TP_RST
R208 NC R0402 LCD_RST
[8] DSI_D0N
[8] DSI_D0P
[8] DSI_D1N
[8] DSI_D1P
[8] DSI_CKN
[8] DSI_CKP
[8] DSI_D2N
[8] DSI_D2P
[8] DSI_D3N
[8] DSI_D3P
VCC3V3_LCD
[7,21] I2C2_SCL
[7,21] I2C2_SDA
VCC5V0_LCD
GPIO10_5 [6] TP_INT
GPIO10_2 [6] TP_RST
GPIO10_4 [6] LCD_RST
PWM0_OUT1 [6,9] LCD_BL
TP_INT
TP_RST
LCD_RST
LCD_BL
FPC_0R5_30P_D
注：I2C、TP_INT、TP_RST、LCD_RST、LCD_BL的信号电平均为1.8V
LCD 电源
VCC5V0_DEV
U26
VCC5V0_LCD
[6] LCD_PWR_EN
GPIO10_3
R226 1K R0402
IN OUT EN GND ISET
LPW5209AB5F
C320 0.1uF
C0402 50V
R227 3.4K R0402
2A限流
C321 10uF
C322 0.1uF
C0402 10V
C0402 50V
VCC3V3_DEV
U27
VCC3V3_LCD
C323 0.1uF
C0402 50V
R228 3.4K R0402
2A限流
C324 10uF
C325 0.1uF
C0402 10V
C0402 50V
GND
东莞野火电子技术有限公司
https://yehuosm.tmall.com
Title
野火鲁班猫SD3403(LubanCat-SD3403)
Size A4
Document Number
MIPI DSI/CSI接口
Rev V1.0
Date: Saturday, October 18, 2025
Sheet 21 of 22

USB WIFI模块

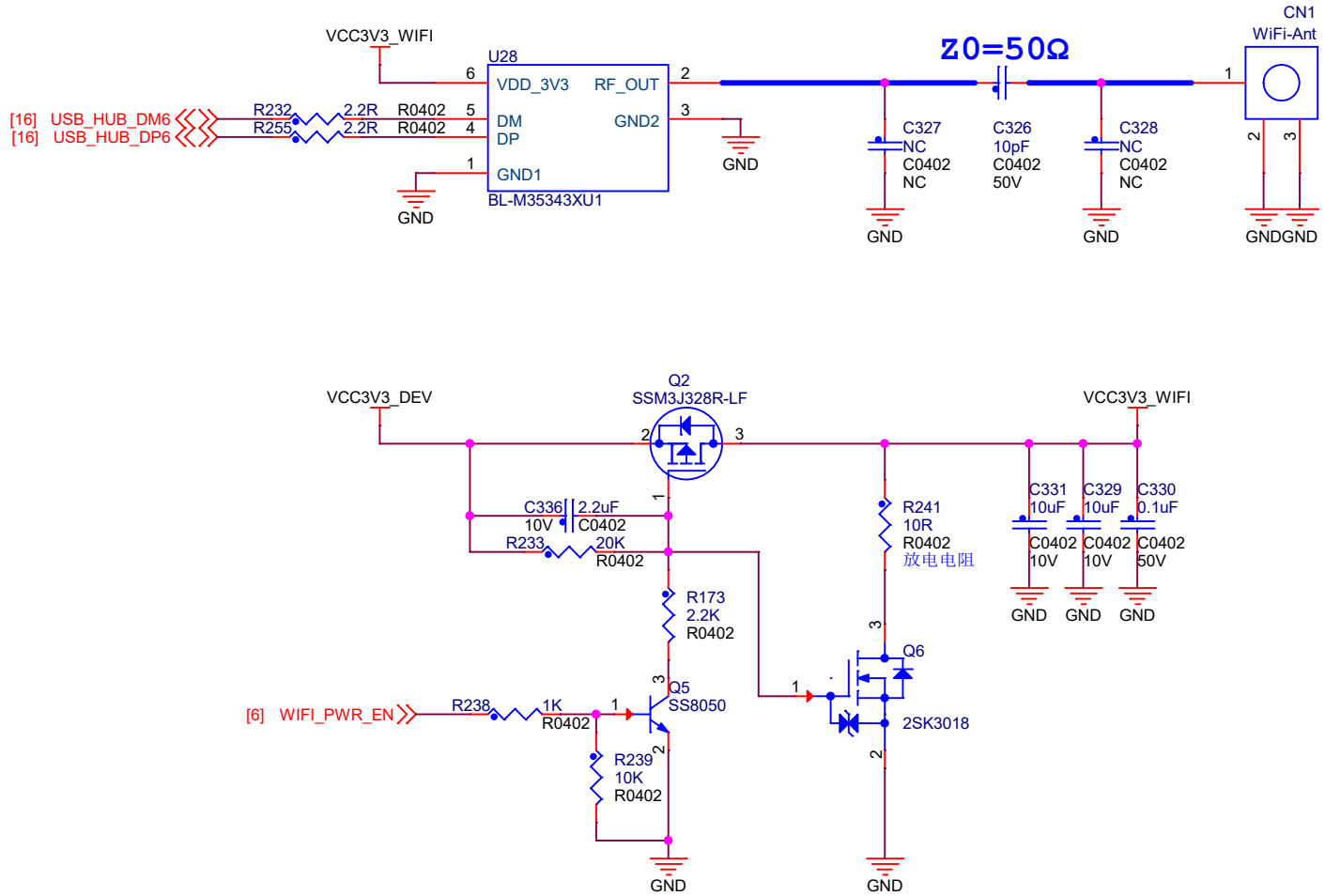

东莞野火电子技术有限公司 https://yehuosm.tmall.com		
Title	野火鲁班猫SD3403(LubanCat-SD3403)	
Size A4	Document Number USB WIFI模块	Rev V1.0
Date: Wednesday, December 24, 2025	Sheet 22 of 22	